ROLLER SHUTTER

TOP XL

Installation instructions



Contents

PARTS REFERENCE

Common parts 02

Exploded view 03

ASSEMBLY

Profiles, guides and plates 04

ROLLER

Wheel positioning 05

Roller holders and roller 06

ASSEMBLY

Seals and fasteners 07

Shutter installation and belts 08

CLOSING SYSTEMS

Locking blocks and gutter profile 09

FINISHING

Pull belt and completed installation 10

Common parts

Common parts

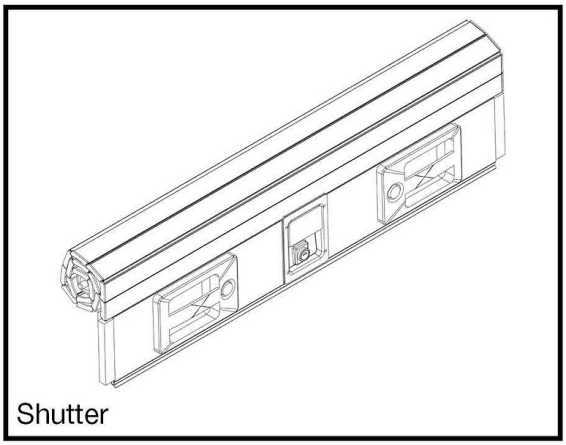
Shutter

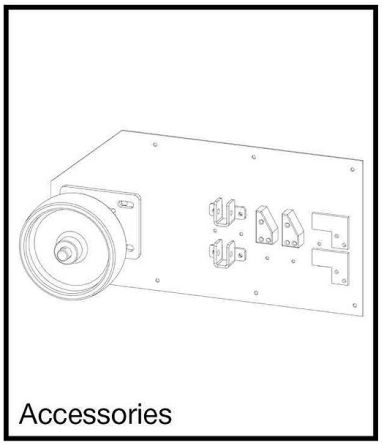
Accessories

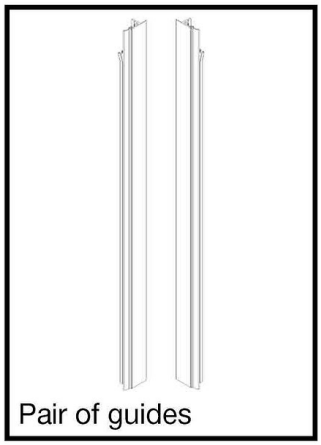
Pair of guides

Num. Art.	Codice Code	Descrizione	Description	Q.tà Q.ty
1	70400	Terminale T4	Closing system T4	1
2	70001.38/A	Profilo serranda H38	Shutter profile H38	N
3	70004	Gomma intermedia	Middle rubber for shutter profile	N
4	70002.SX.38	Pattino sinistro H30	Left sliding plate H38	N
5	70002.DX.38	Pattino destro H38	Right sliding plate H38	N
6	70410	Aglas per T4	Aglas T4	2
7	70003.MP1/A 70003.MP2/A 70003.MP4/A 70003.MP5/A	Guida MP1 Guida MP2 Guida MP4 Guida MP5	Side profile MP1 Side profile MP2 Side profile MP4 Side profile MP5	2
8	70005	Gomma guide di tenuta anteriore	Seal rubber	2
9	70209	Piastrina regolabile blocco superiore	Upper block	2
10	70022_125	Gruppo ruota ø125	Wheel group ø125	2
11	70016	Piastra di fissaggio XL	Fixing plate	2
12	70017.XL	Sede-supporto rullo ø60	Roll space ø60	2
13	70021	Rullo ø60	Roll ø60	1
14	70012	Angolare superiore 50x20 (copertina)	Little cover 50x20	1
15	70011.S 70011.B	Profilo gocciolatoio PICCOLO Profilo gocciolatoio GRANDE con gomma	SMALL gutter profile BIG gutter profile with rubber	1
16	70014.S 70014.B	Profilo battuta PICCOLO Profilo battuta GRANDE	SMALL lower profile BIG gutter profile	1

Exploded view

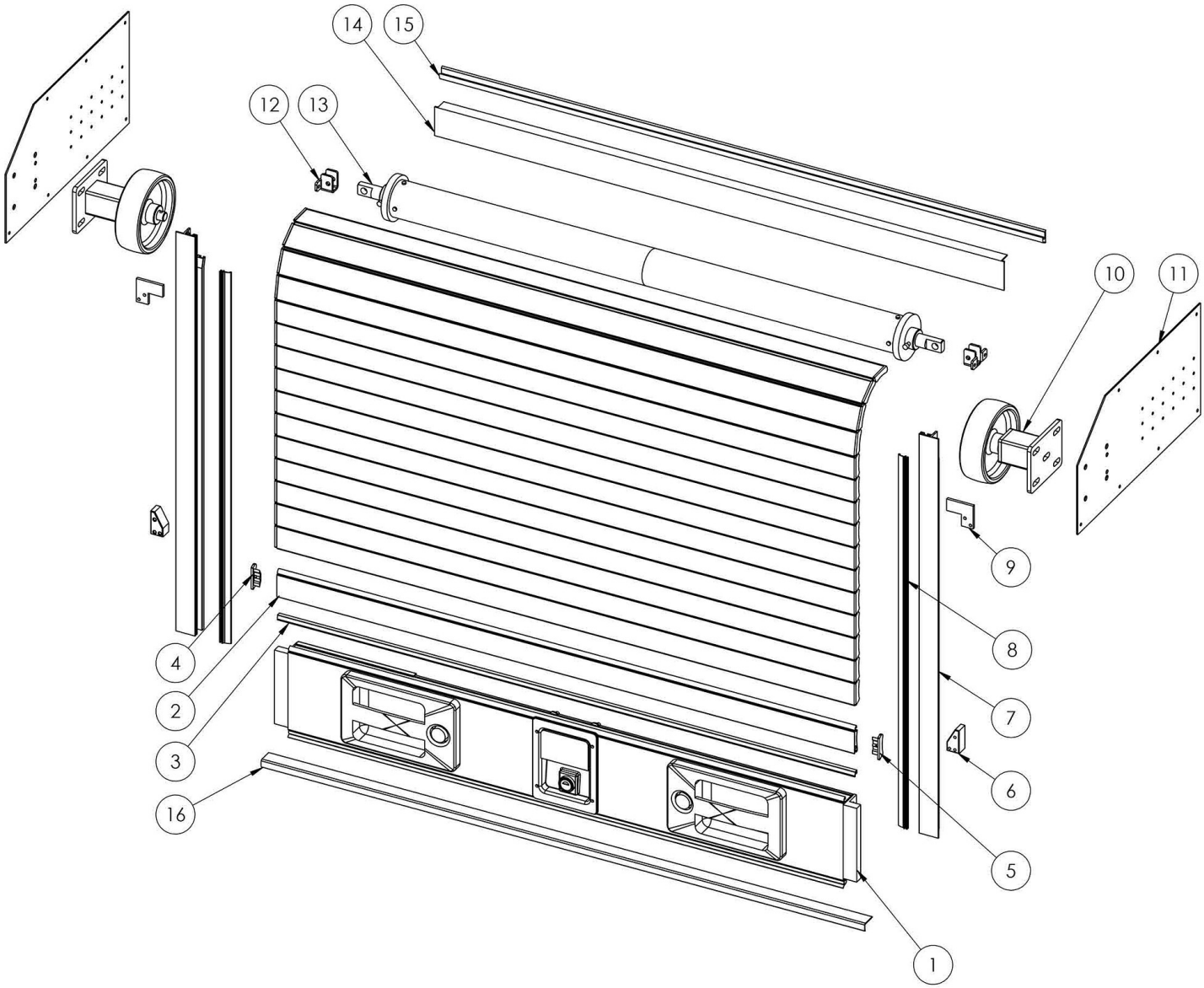

Profiles, guides and plates

1. Drill and fix the lower profile (optional).

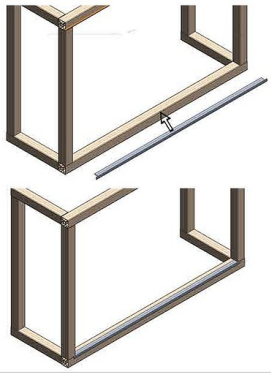



SMALL LOWER PROFILE

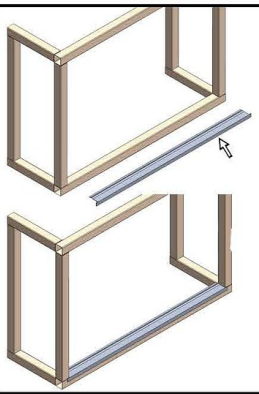



BIG LOWER PROFILE

WARNING:
Lower profile supplied 25 mm longer than width (Ws) for a correct matching between lower profile and guides.

2. Drill and place the guides, fixing them temporarily

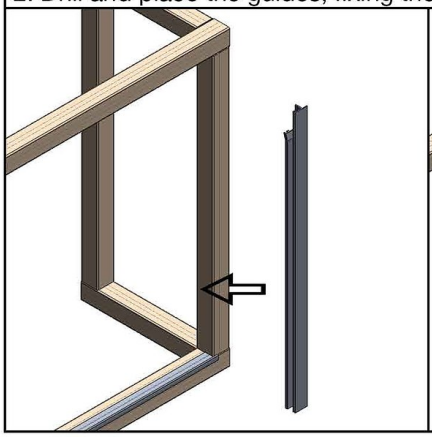

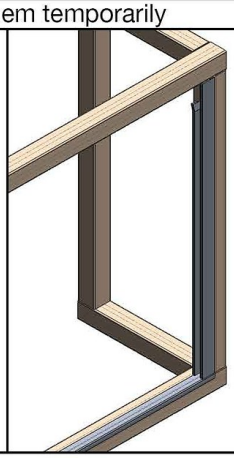

WARNING: Without the exact length of the guides (Hg),they will supplied long as the total height (Htot).

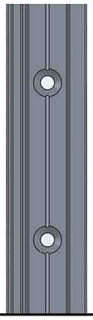

Drill and countersink for screws ø3.5 x 19

3. Drill and fix the little cover, L profile 50 x 20 (optional).

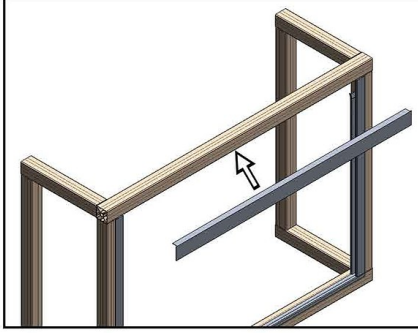

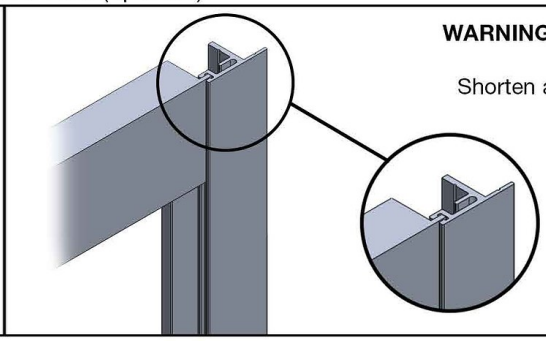

WARNING: The little cover will supplied long as the width (Ws). Shorten and machine it for matching it with the guides.

4. Fix the plates taking care to position them correctly as in figure 4.

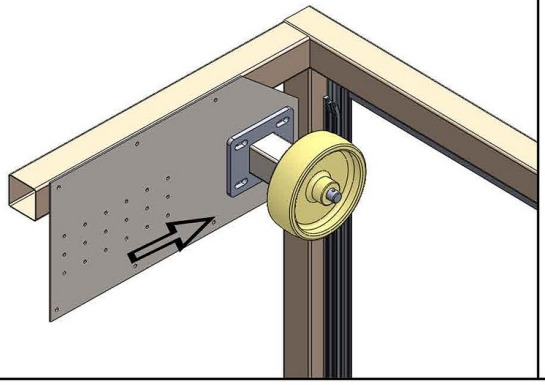

WARNING: The plate must me against the guide.

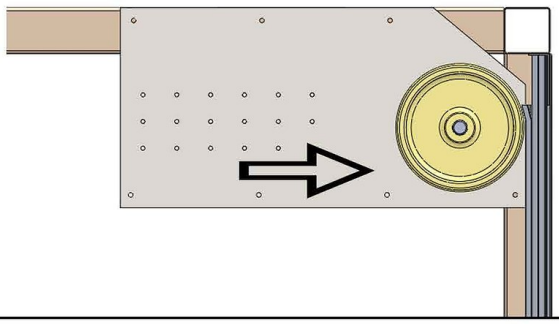

Wheel positioning

5. Define the correct position of the wheel, taking into account the informations below.

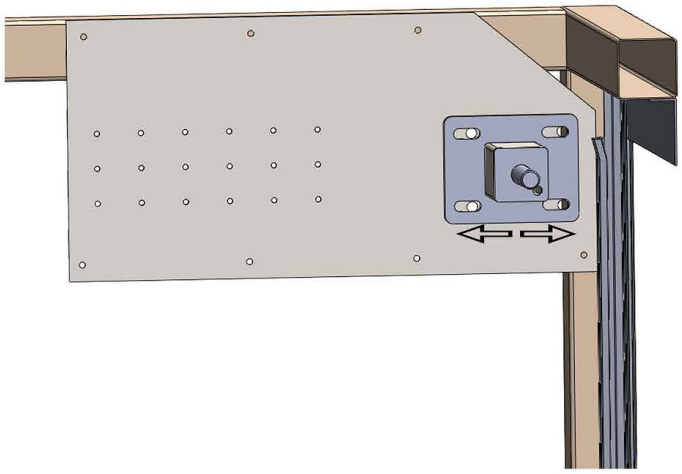

A) Move right or left, ONLY the wheel axle, leaving the plate against the guide.

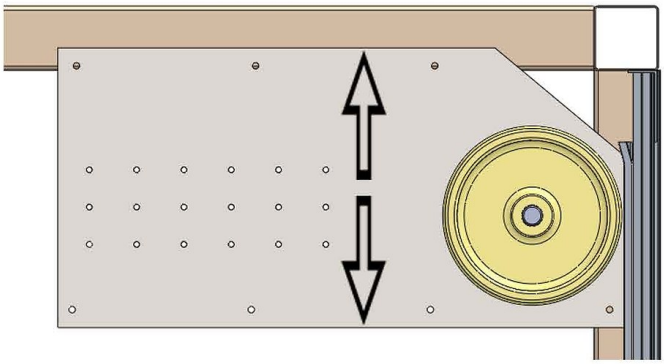

B) Move the plate and pin up and down with the wheel, always leaving the plate against the guide.

ATTENZIONE: Adjust the wheel so that closes the light between the shutter and your bodywork or the little cover - L profile 50 x 20 supplied.

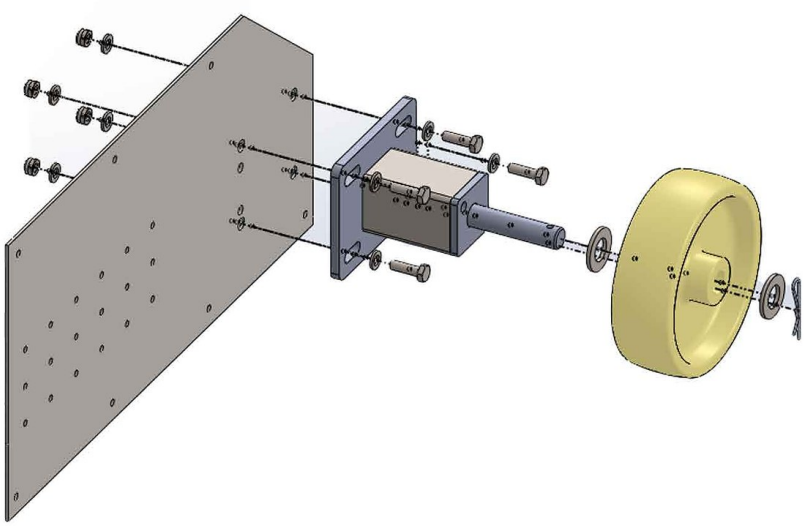

Roller holders and roller

6. Screw the holders into the correct position, taking care of the diameter of the shutter closed, without any interference with the roof or any other part of the bodywork of the shutter

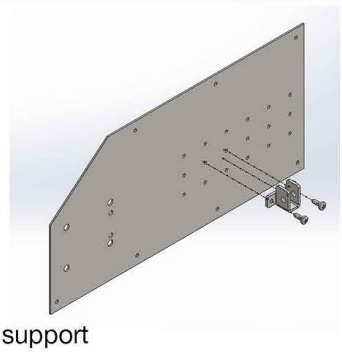

Left support

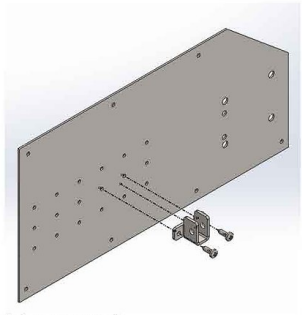

Right support

6a. Wrapped diameterr obtainable by measuring the wrapped shutter as received.

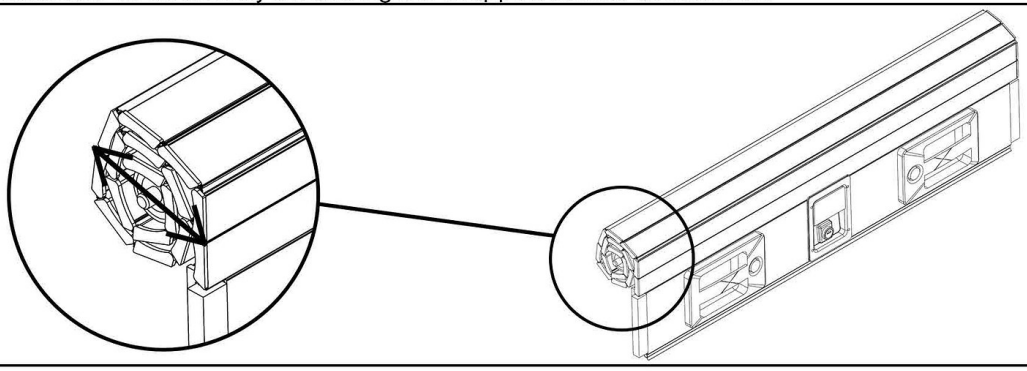

7. Place the roll in the support, **TAKING CARE TO KEEP THE BLACK BAND DOWNWARDS**.

Left support

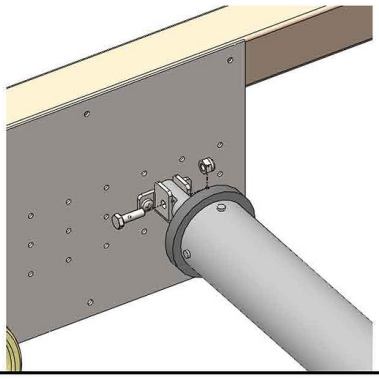

Right support

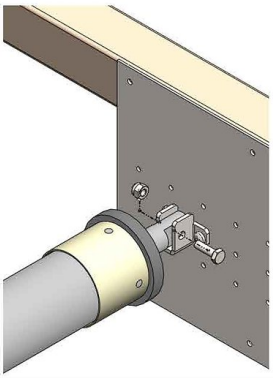

The black band **MUST BE** downwards.

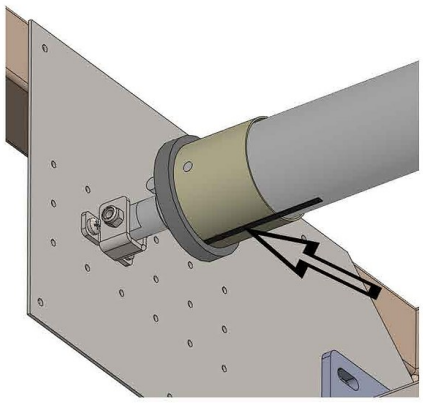

Seals and fasteners

8. Mark the intersection point betweenthe guide and the little cover - L profile 50 x 20 - this mark will help you to know the exact measure of the rubber.
After that **REMOVE** the guides.

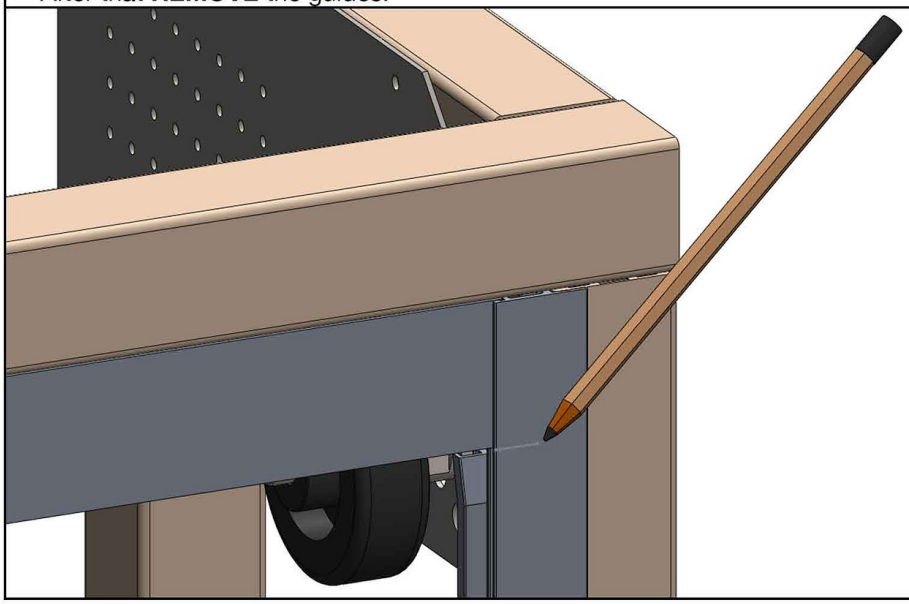

10. Insert the bolts on the right and left guide, in sufficient quantity for fixing the lower blocks (aglas) for the terminal, the upper stop plates (for the damper stop)

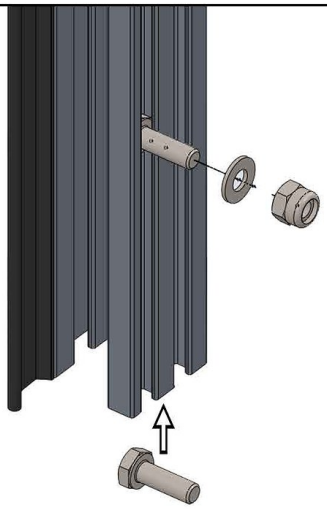

9. Cut the rubber diagonally and insert it into the guides, after that cut it takinginto account the sign made before (point 6).

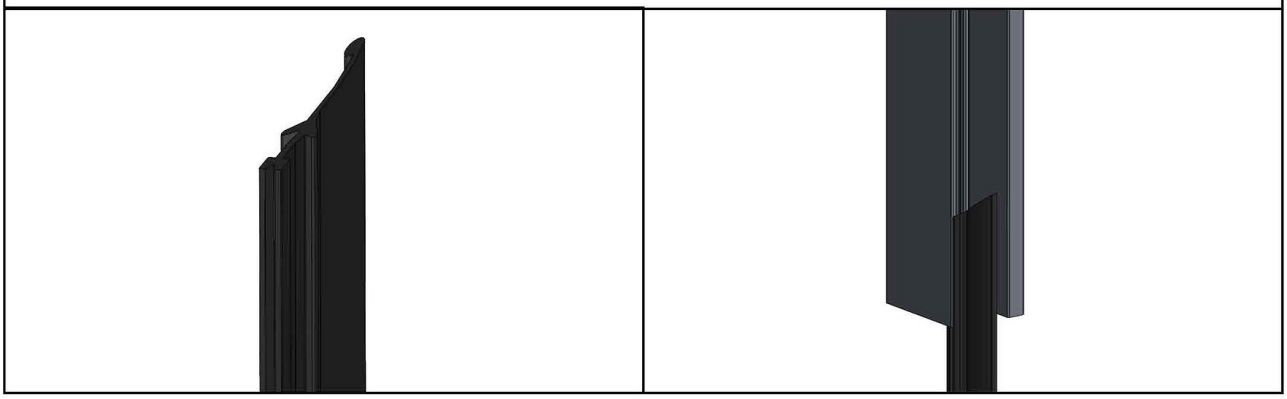

Shutter installation and belts

11. Place the shutter over the roll, bringing it to the maximum opening (A).
Place again the guides taking care that the shutter stay inside them (B);
after that fix the guide with screws, use screws ø3.5 x 19 (C).

A

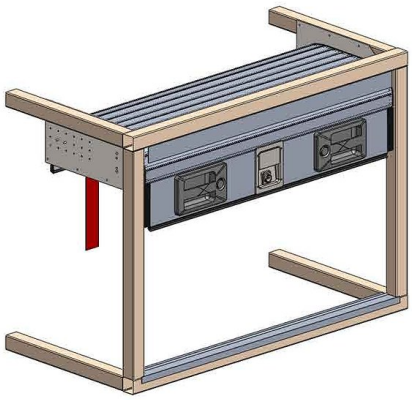

B

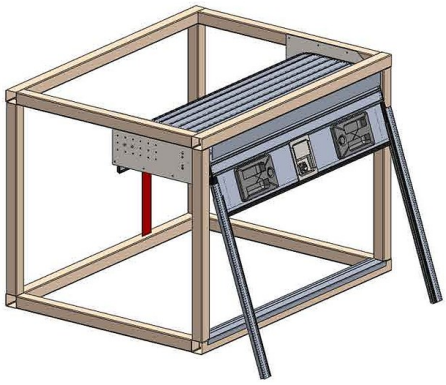

C

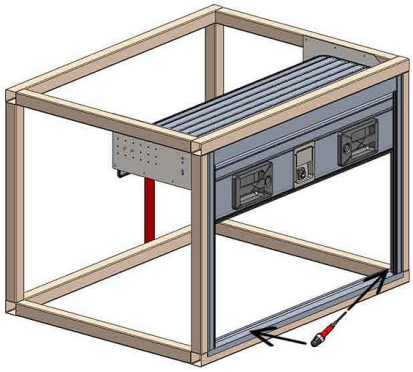

12. Fix the straps to the roll through the supplied rivets - rivets 4,8 x 12 - T16 (A).
Remove the protection from the roll (B).
Remove the safety pin while holding the roller still in the safety position; since load would wrap (C).

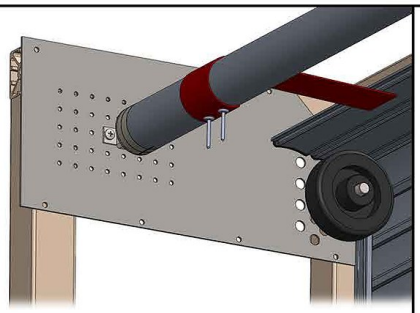

A

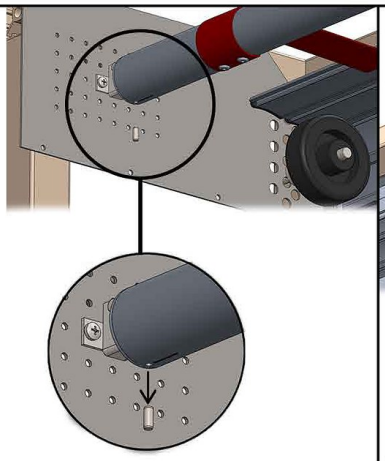

B

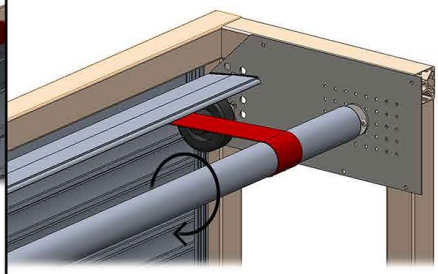

C

Locking blocks and gutter profile

14A. Set the upper block (A) and fix the lower locking for T2 (B).

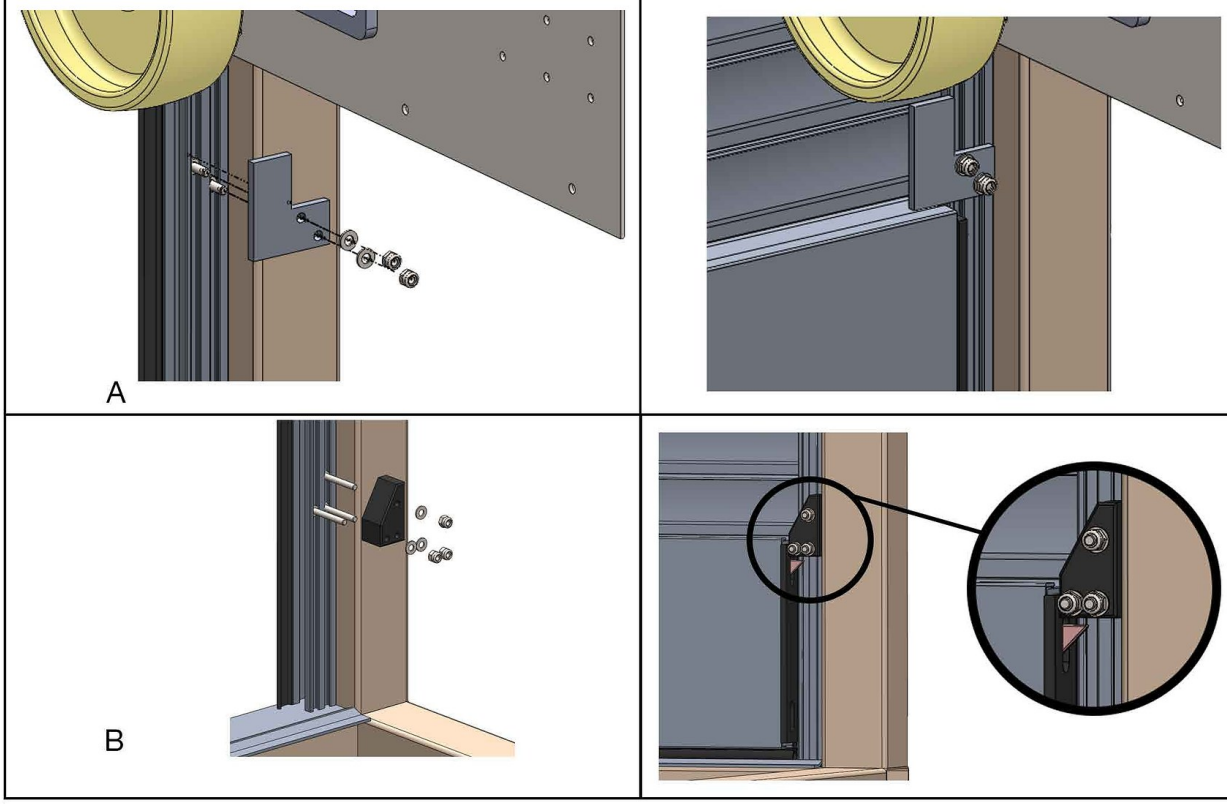

15. Drill and fix the gutter profile (optional). Insert the rubber, if you chose the big gutter profile.

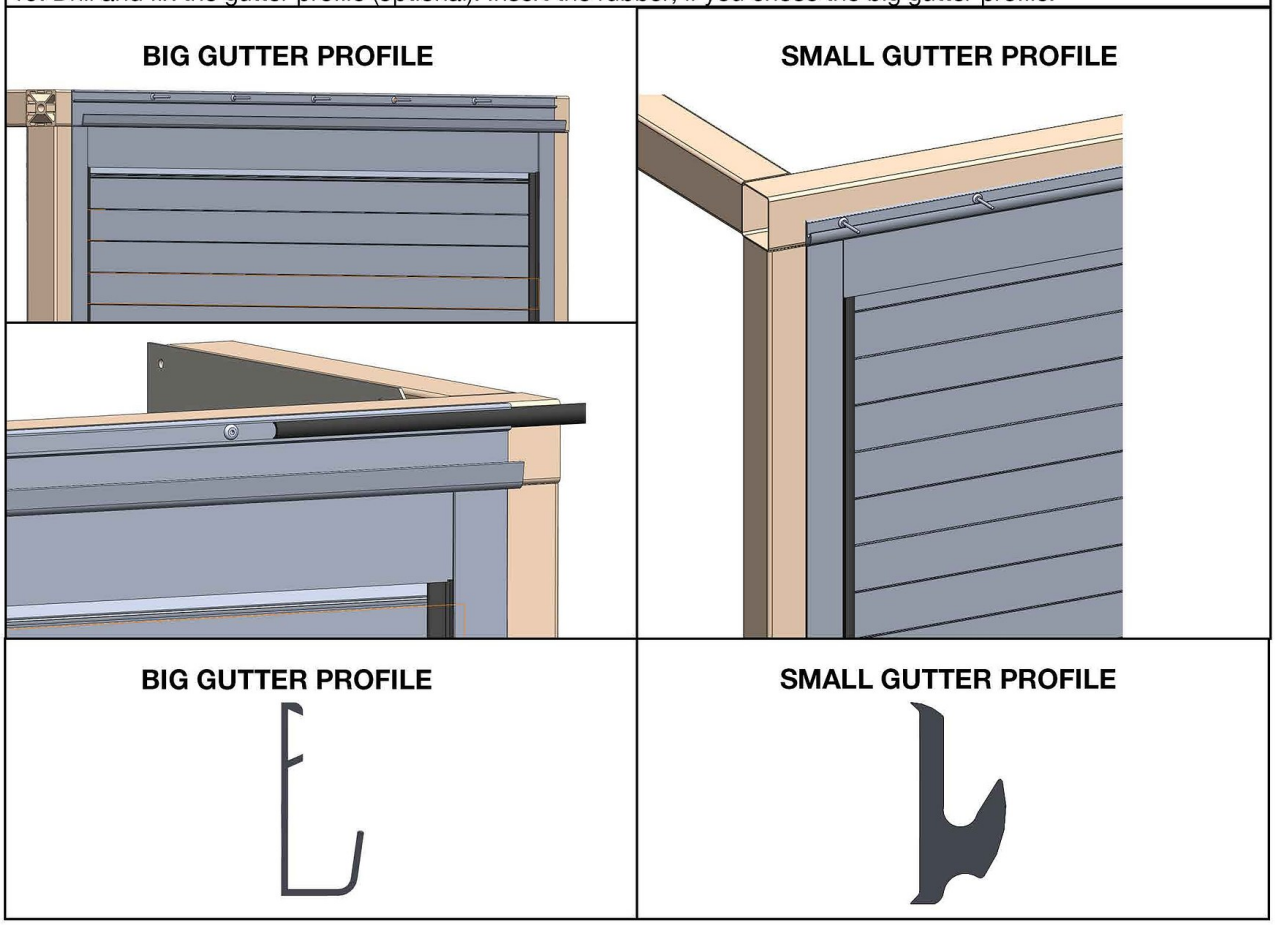

Pull belt and completed installation

16. Drill and fix one end of the strap onto the cover of the terminal using the hardware provided. Hole ø4.
With the shutter open, fix the belt on the body pillar, using the same method and with the screws supplied.

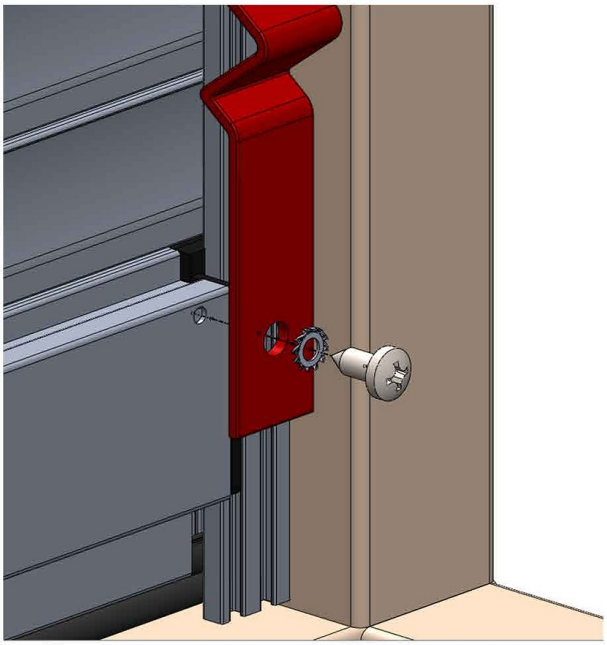

17. The shutter is ready to be used. For better sliding over time, it is recommended to grease the side guides with standard mechanical grease.

