ROLLER SHUTTER

TOP READY

Installation instructions



Contents

PARTS REFERENCE

Common parts 02

Exploded view 03

ASSEMBLY

Compartment dimensions and profiles 04

Guides and mounting brackets 05

Installing the preassembled kit 06

Plate adjustment and fastening 07

CLOSING SYSTEMS

Wheel adjustment and closing systems 08

T3 and T5 locking hardware 09

FINISHING

Gutter profile and completed installation 10

Common parts

Common parts



Premounted Shutters

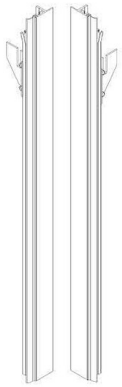

Pair of guides

Num. Art.	Codice Code	Descrizione	Description	Q.tà Q.ty
1	70500	Terminale T5	Closing system T5	1
2	70311	Profilo di presa	Grip profile	1
3	70311.B	Blocchetto profilo di presa	Pad for grip profile	2
4	70001.30 70001.38	Profilo serranda H30 Profilo serranda H38	Shutter profile H30 Shutter profile H38	N
5	70004	Gomma intermedia	Middle rubber for shutter profile	N
6	70002.DX.30 70002.DX.38	Pattino destro H30 Pattino destro H38	Right sliding plate H30 Right sliding plate H38	N
7	70002.SX.30 70002.SX.38	Pattino sinistro H30 Pattino sinistro H38	Left sliding plate H30 Left sliding plate H38	N
8	70003.MP5	Guida MP5	Side guide MP5	2
9	70005	Gomma guide di tenuta anteriore	Seal rubber	2
10		Staffa di rinforzo destra		1
11		Staffa di rinforzo sinistra		1
12	70308	Aglas inferiore	Lower locking	2
13	70309	Aglas superiore	Upper locking	2
14	70019.MP5.DX	Piastra Ready MP5 (DX)	Fixing plate for Ready MP5 - R	1
15	70019.MP5.SX	Piastra Ready MP5 (SX)	Fixing plate for Ready MP5 - L	1
16	70019.TIR	Tirante per Ready (L. 50x20)		3
17	70035	Omega	Omega support	2
18	70022_128	Gruppo ruota ø128	Wheel group ø128	2
19	70017	Supporto per rullo D.45	Roll space	1
20	70018	Supporto perno con boccola per rullo D.45	Pin with bearing	1
21	70013	Angolare superiore 80x20	Little cover 80x20	1
22	70011.S 70011.B	Profilo gocciolatoio PICCOLO Profilo gocciolatoio GRANDE con gomma	SMALL gutter profile BIG gutter profile with rubber	1
23	70014.S 70014.B	Profilo battuta PICCOLO Profilo battuta GRANDE	SMALL lower profile BIG lower profile	1

Exploded view

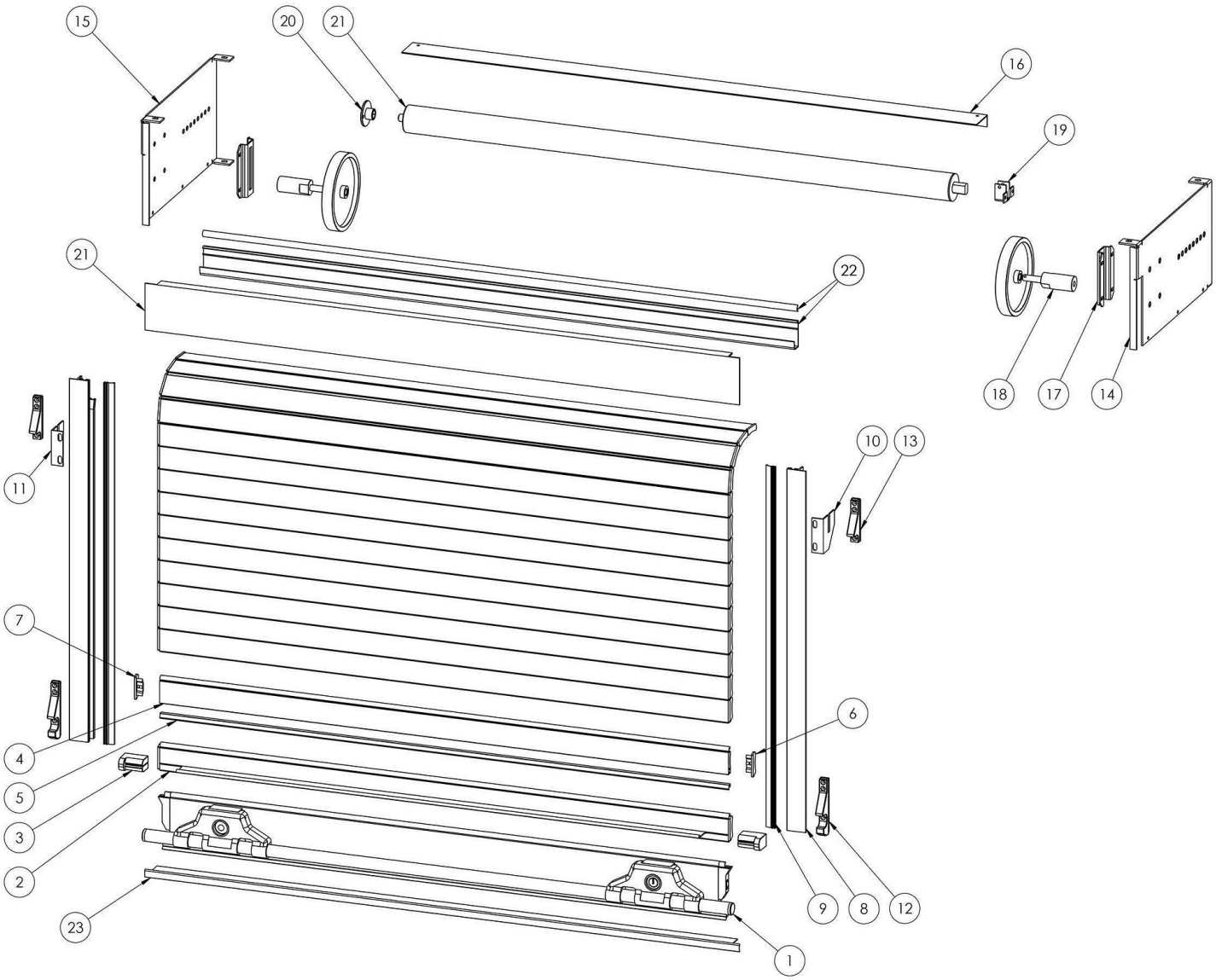

Compartment dimensions and profiles

1. Check that the internal measurements of the compartment are correct.

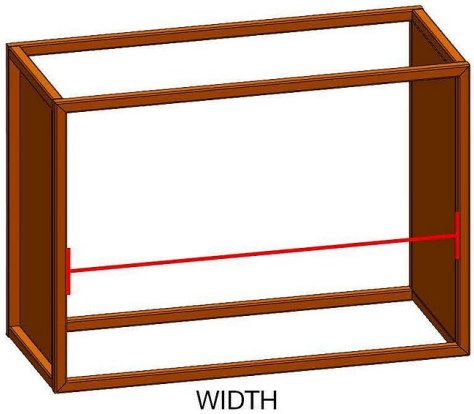

WIDTH

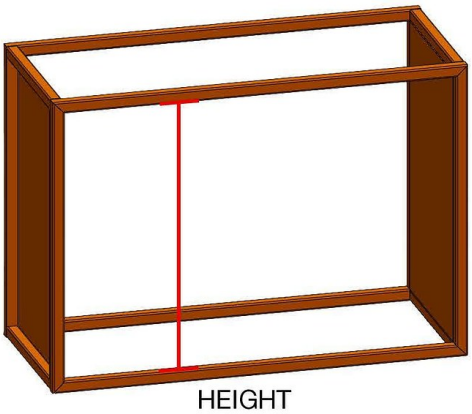

HEIGHT

2. Drill and fix the lower profile (if requested), with the double-side tape already provided (A).

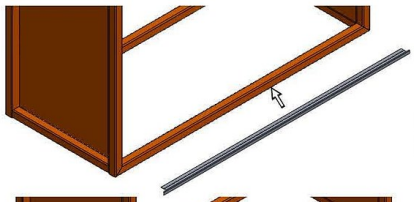



SMALL LOWER PROFILE

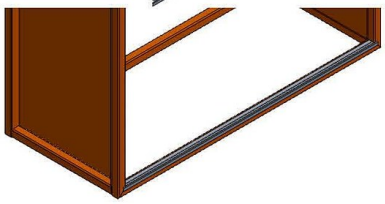

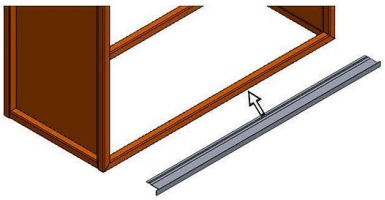



BIG LOWER PROFILE

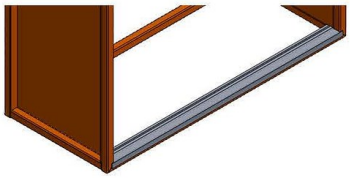

A

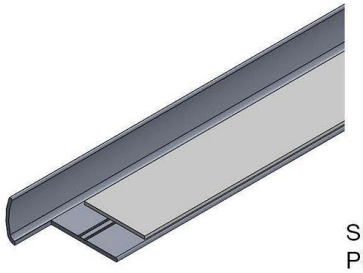

SMALL LOWER PROFILE

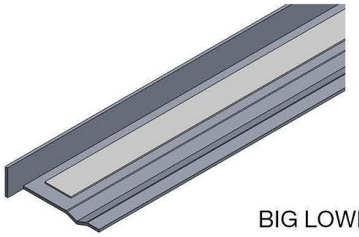

BIG LOWER PROFILE

3. Fix the upper profile - Cover 80 x 20, with the double-side tape already provided (A).

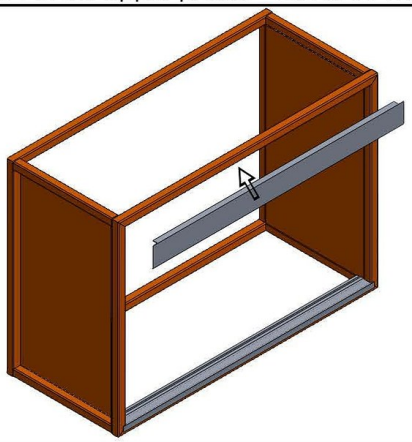

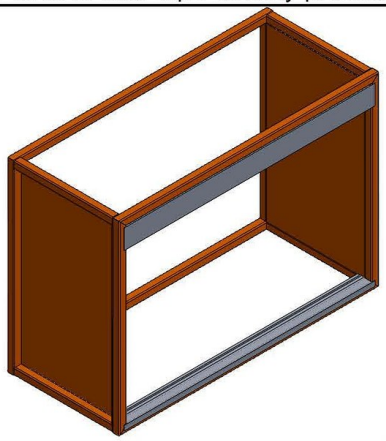

A

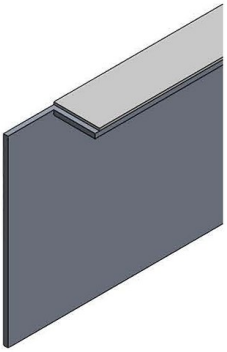

Guides and mounting brackets

4.Insert the bolts provided, in the required quantity, into the guide to secure the plate supports and any optional extras (A). Then fix the support plates (B).

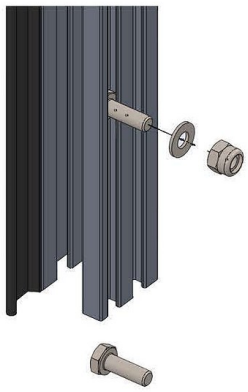

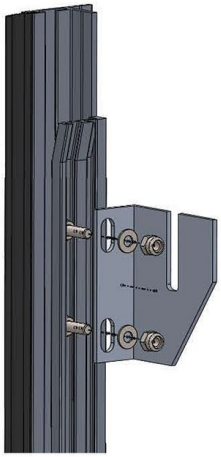

5. Insert the guides into the plates, using the appropriate couplers.

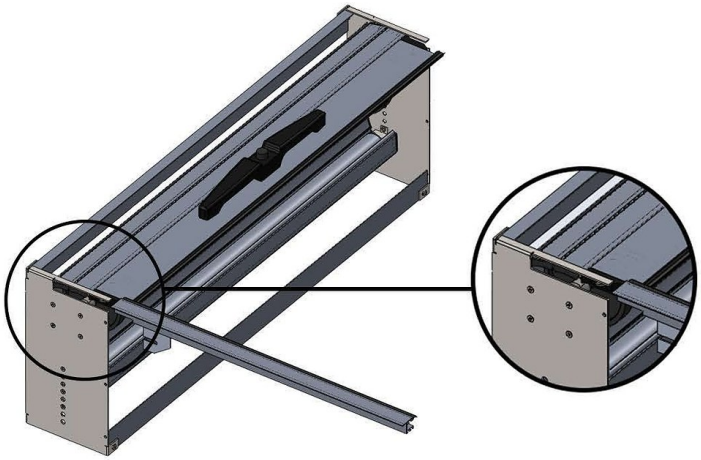



6. Adjust and fix the brackets mounted on the plates, using the TPS screws already provided.

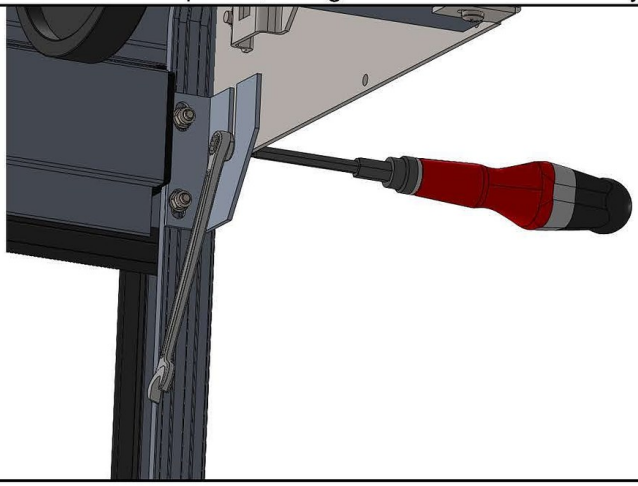

Installing the preassembled kit

7. Insert the entire ready kit, with the guides mounted, inside the compartment (this operation should be done with two or more people, depending on the size and weight of the shutter).

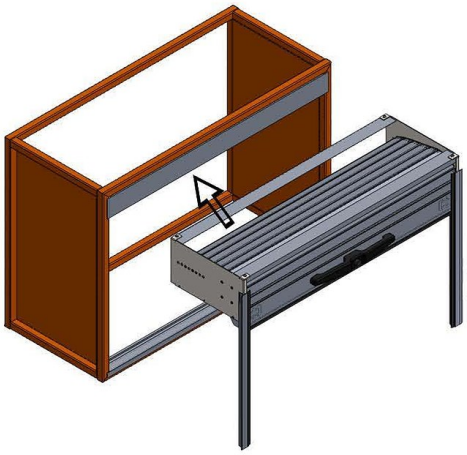

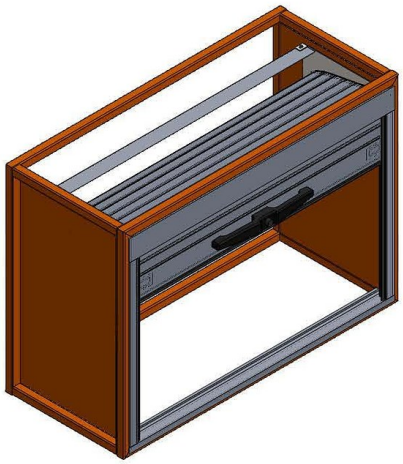

8. Fix the guides, already drilled to the compartment.

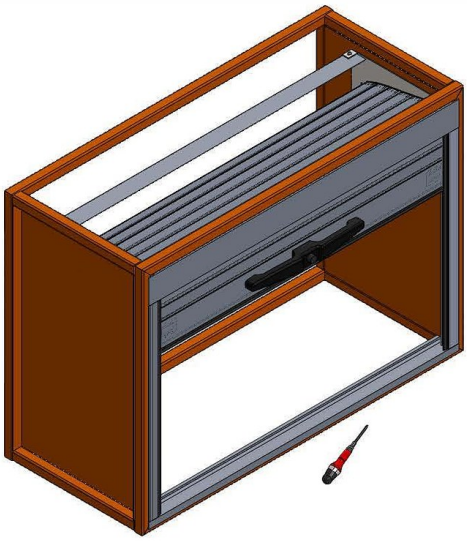

Plate adjustment and fastening

9. Check and adjust, if necessary, the correct height position of the plates.

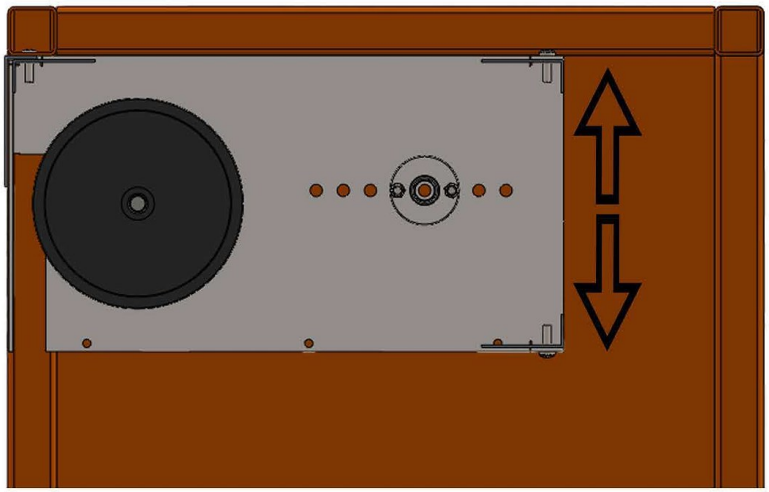

10. Attach the plates to the compartment with screws or rivets.

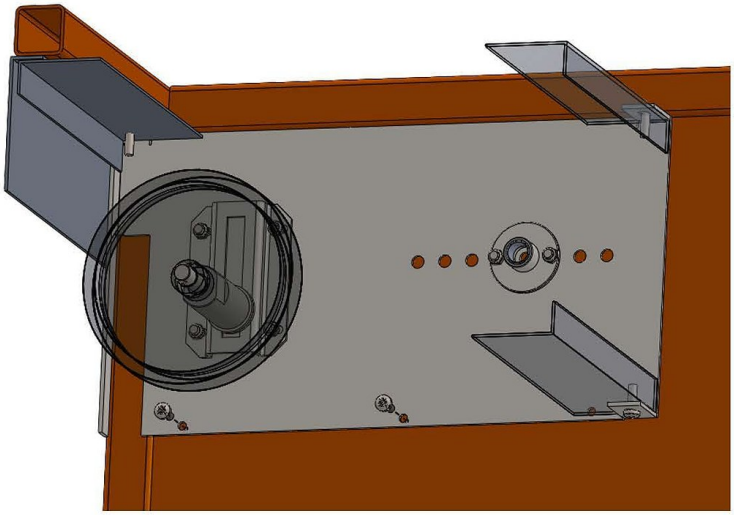

Wheel adjustment and closing systems

11. If necessary, adjust the height of the wheels using the adjustable pin.

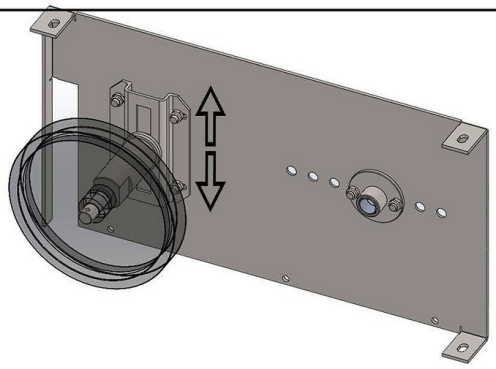

FIXING T2 TERMINAL CLOSURES

12. Adjust the upper retaining plates (A) and lower retaining aglas (B).

(A)

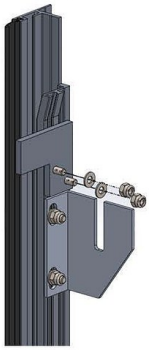

(A)

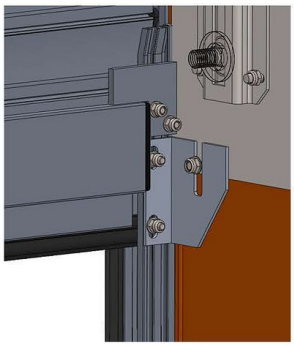

(B)

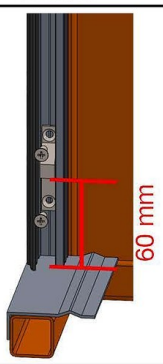

(B)

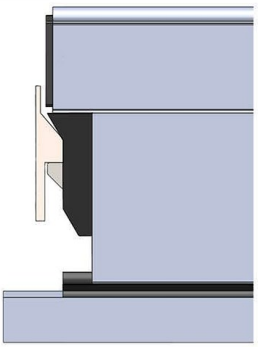

FIXING T3 & T5 TERMINALS CLOSURES

13. Insert the ø20 (WS + 20mm) tube into the blocks (A).
    Then insert the plugs into the bar (B).
    Drill and fix the tube on the block using the rivets provided.



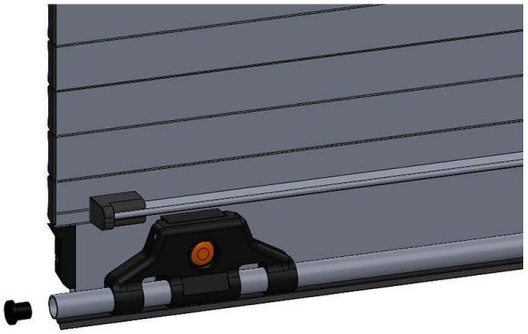

T3 and T5 locking hardware

14. Insert the bar into the side fasteners, position them correctly, and secure them with the rivets provided.
Rivets 4 x16

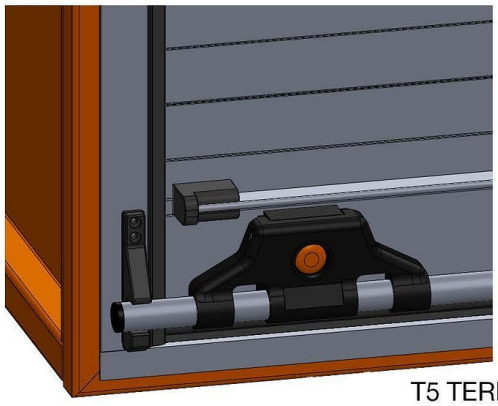

T5 TERMINAL

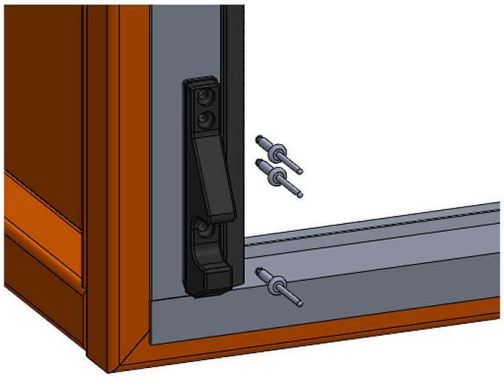

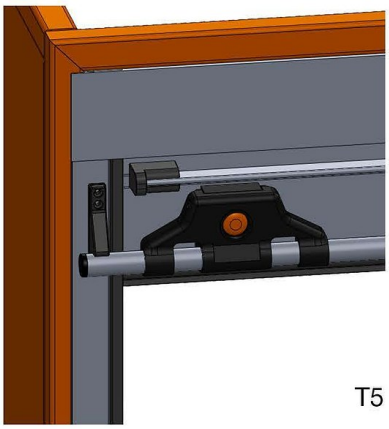

T5 TERMINAL

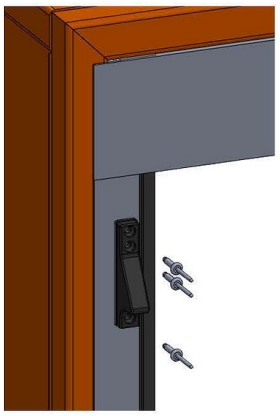

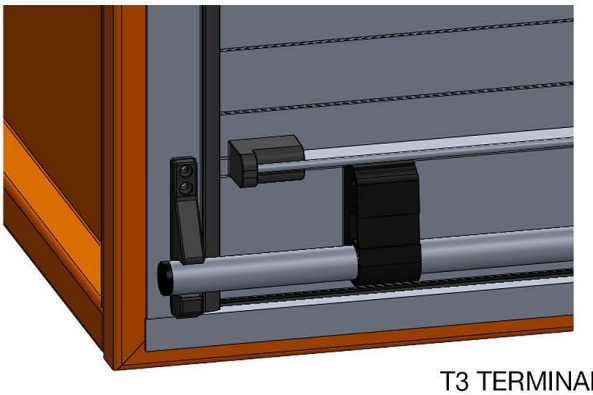

T3 TERMINAL

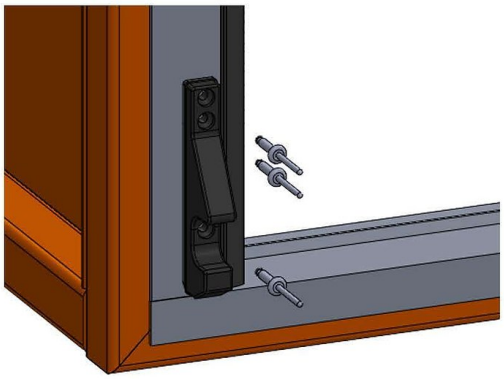

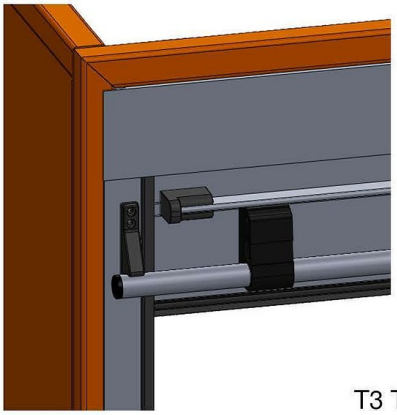

T3 TERMINAL

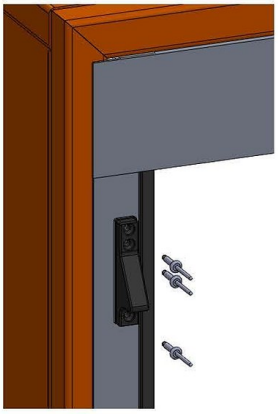

Gutter profile and completed installation

15. Drill and fix the gutter profile (optional). Insert the rubber, if you choose the big gutter profile.

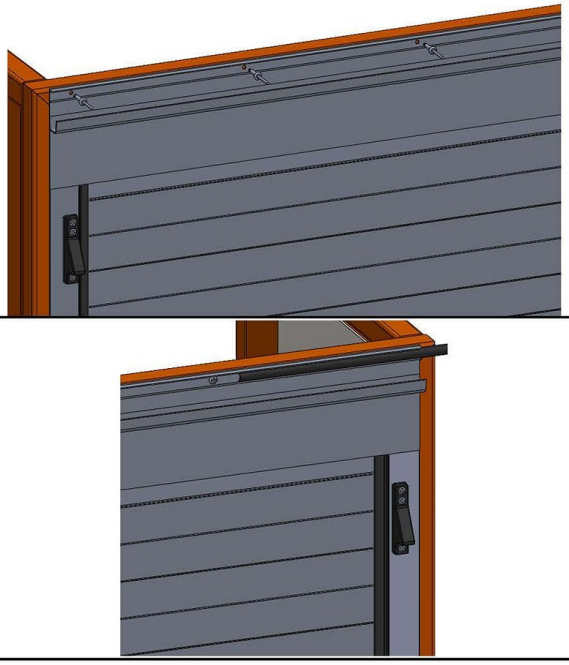



BIG GUTTER PROFILE



SMALL GUTTER PROFILE



16. The shutter is ready to be used. For a better sliding over time, it is reccomended to grease the side guides with standard mechanical grease.

