ROLLER SHUTTER

TOP

Installation instructions



Contents

PARTS REFERENCE

Common parts 02

Exploded view 03

ASSEMBLY

Profiles, guides and plates 04

ROLLER

Wheel positioning 05

Roller holders and roller 06

ASSEMBLY

Seals and optional fittings 07

Shutter installation and belts 08

CLOSING SYSTEMS

Closing systems T3 and T5 09

T2 closing system and gutter profile 10

FINISHING

Pull belt and completed installation 11

Common parts

Common parts

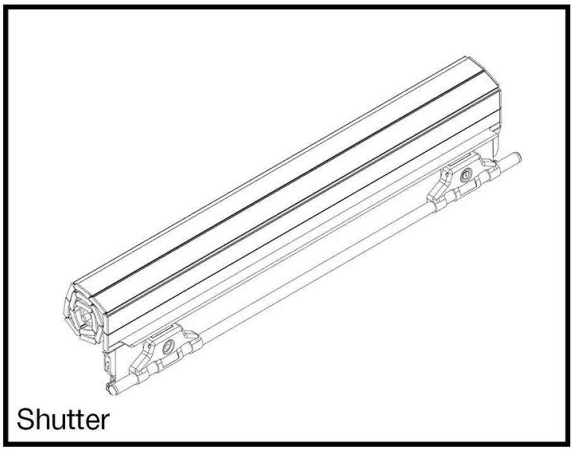
Shutter

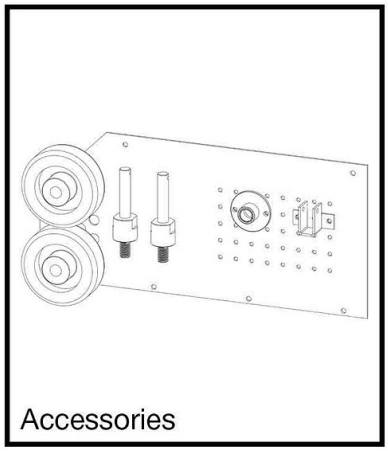
Accessories

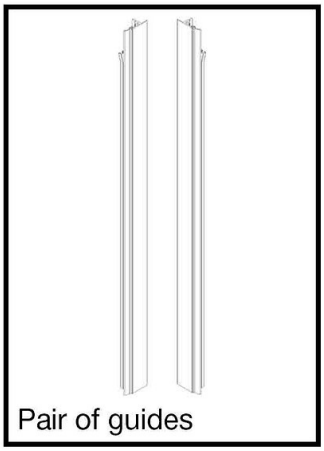
Pair of guides

Num. Art.	Codice Code	Descrizione	Description	Q.tà Q.ty
1	70500	Terminale T5	Closing system T5	1
2	70311	Profilo di presa	Grip profile	1
3	70001.30/A 70001.38/A	Profilo serranda H30 Profilo serranda H38	Shutter profile H30 Shutter profile H38	N
4	70004	Gomma intermedia	Middle rubber for shutter profile	N
5	70002.DX.30 70002.DX.38	Pattino destro H30 Pattino destro H38	Right sliding plate H30 Right sliding plate H38	N
6	70002.SX.30 70002.SX.38	Pattino sinistro H30 Pattino sinistro H38	Left sliding plate H30 Left sliding plate H38	N
7	70311.B	Tappo per profilo di presa	Plug for grip profile	2
8	70003.MP1/A 70003.MP2/A 70003.MP4/A 70003.MP5/A	Guida MP1 Guida MP2 Guida MP4 Guida MP5	Side profile MP1 Side profile MP2 Side profile MP4 Side profile MP5	2
9	70005	Gomma guide di tenuta anteriore	Seal rubber	2
10	70308	Aglas inferiore	Lower locking	2
11	70309	Aglas superiore	Upper locking	2
12	70018	Supporto perno con bronzina per rullo (SX)	Pin with bearing	1
13	70017	Sede-supporto per rullo (DX)	Roll space	1
14	70015	Piastra di fissaggio	Fixing plate	2
15	70200	Rullo ø45	Roll ø45	1
16	70012	Angolare superiore 50x20 (copertina)	Little cover 50x20	1
17	70011.S 70011.B	Profilo gocciolatoio PICCOLO Profilo gocciolatoio GRANDE con gomma	SMALL gutter profile BIG gutter profile with rubber	1
18	70014.S 70014.B	Profilo battuta PICCOLO Profilo battuta GRANDE	SMALL lower profile BIG gutter profile	1
19	70022_80 70022_100 70022_128	Gruppo ruota ø80 Gruppo ruota ø100 Gruppo ruota ø128	Wheel group ø80 Wheel group ø100 Wheel group ø128	2

Exploded view

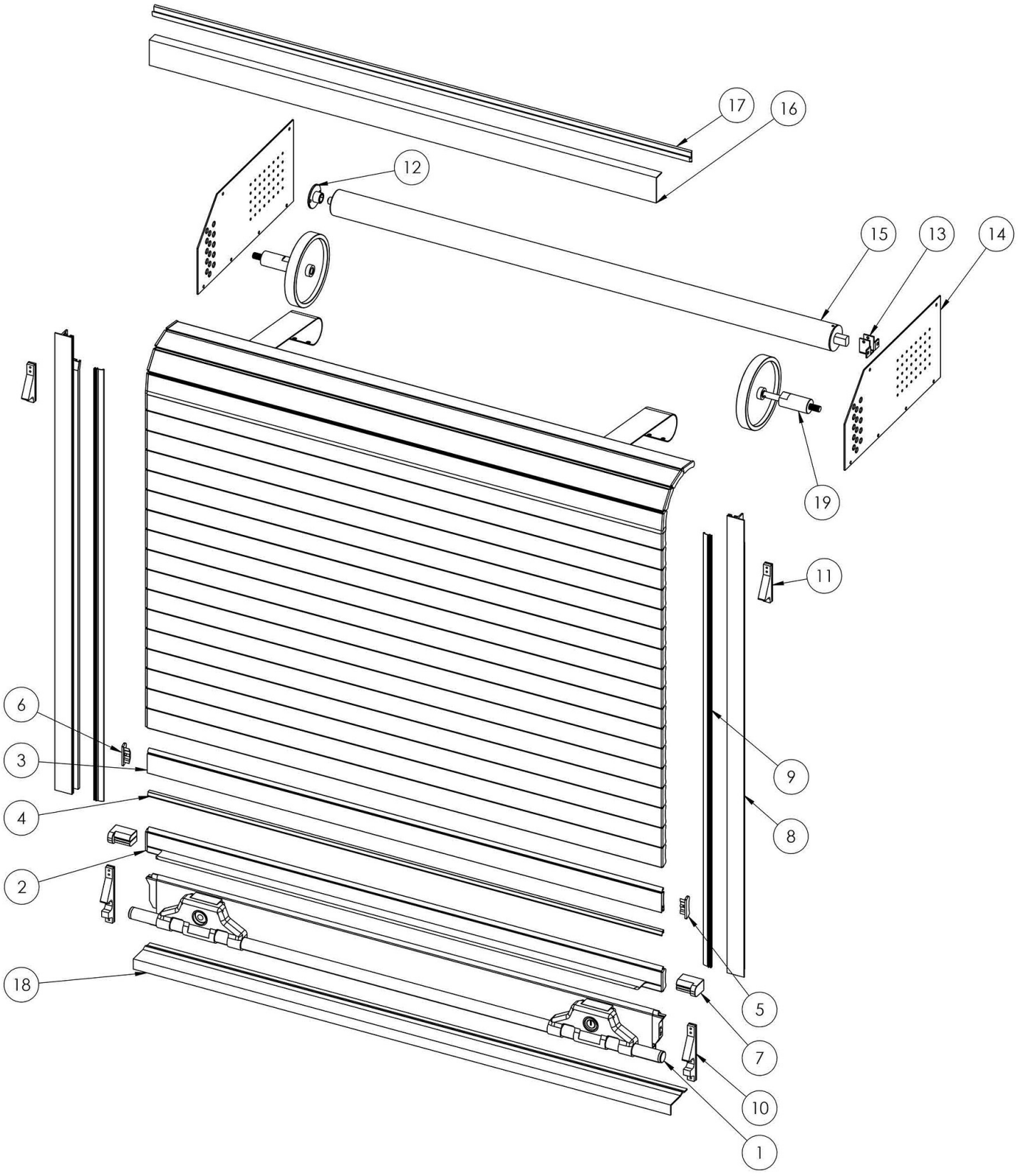

Profiles, guides and plates

1. Drill and fix the lower profile (optional).

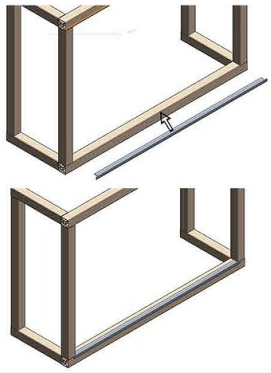



SMALL LOWER PROFILE

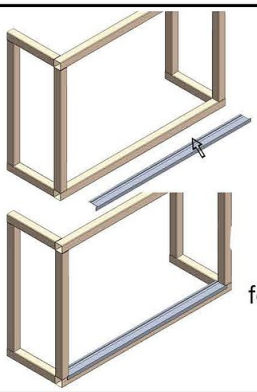



BIG LOWER PROFILE

Lower profile supplied 25 mm longer than width (Ws) for a correct matching between lower profile and guides.

2. Drill and place the guides, fixing them temporarily.

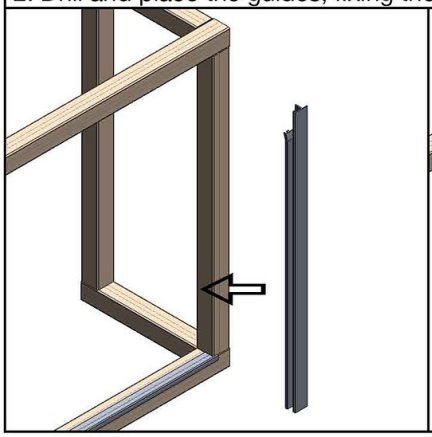

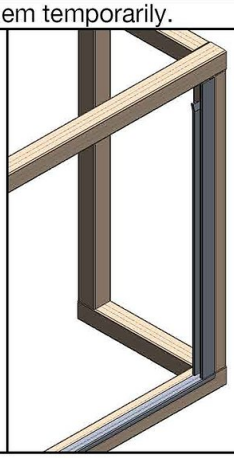

WARNING: Without the exact length of the guides (Hg) they will supplied long as the total height (Htot).

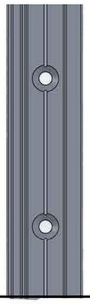

Drill and countersink for screws ø3.5 x 19

3. Drill and fix the little cover, L profile 50 x 20 (optional).

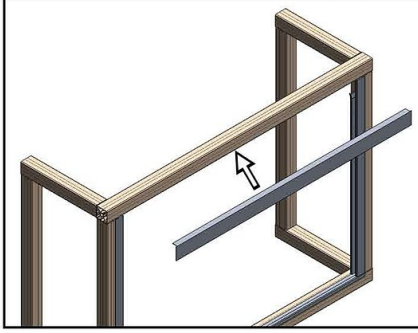

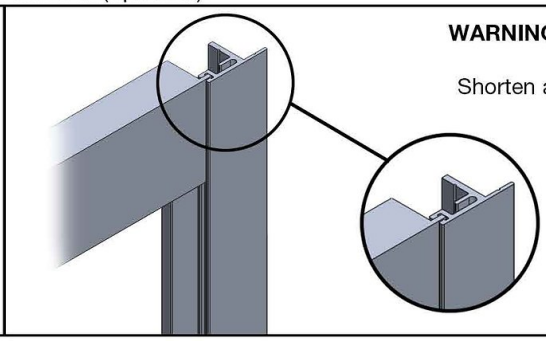

WARNING:The little cover will supplied long as the width (Ws). Shorten and machine it for matching it with the guides.

4. Fix the plates correctly as shown below.

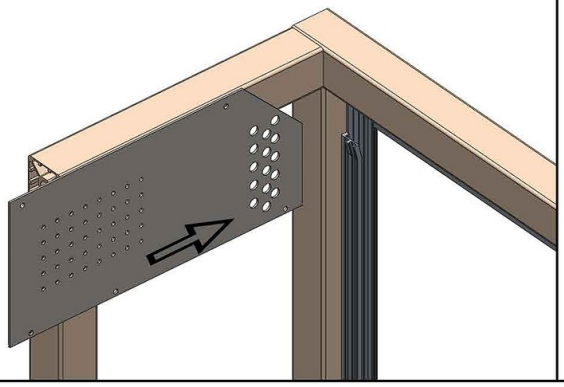

WARNING: The plate must be fixed against the guide.

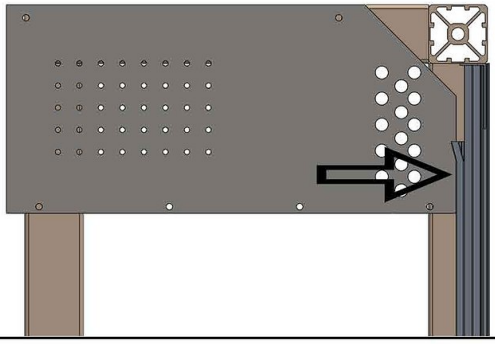

Wheel positioning

5. Define the correct position of the wheel, taking into account the informations below.

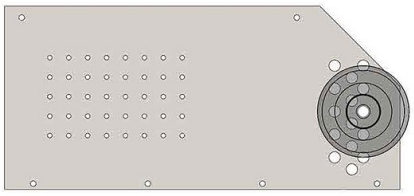



Ⓐ Wheel ø 80: placed in the first row.
The wheel can be moved, up or down, along the first row of holes.

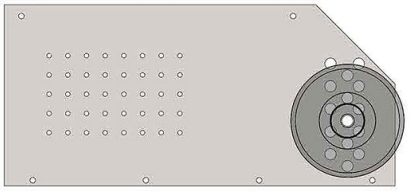



Ⓑ Wheel ø 100: placed in the second row.
The wheel can be moved, up or down, along the second row of holes.

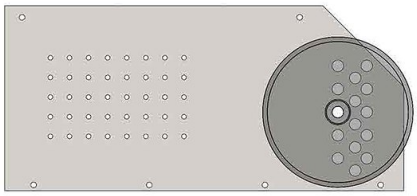



Ⓒ Wheel ø 128: placed in the third row.
The wheel can be moved, up or down, along the third row of holes.

WARNING: Adjust the wheel in order to close the space (light) between the shutter and your frame or L of 50x20 little cover (if supplied).

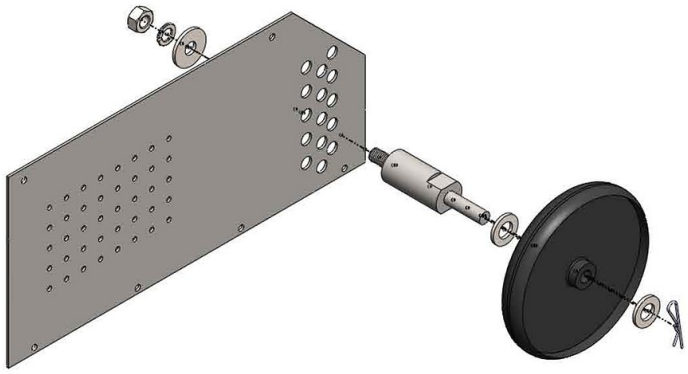

Roller holders and roller

6. Screw the roll holders into the correct position, considering the diameter of the wrapped shutter. Ther roll holders should not interfere with the roof or other parts of the bodyworks or the shutter.

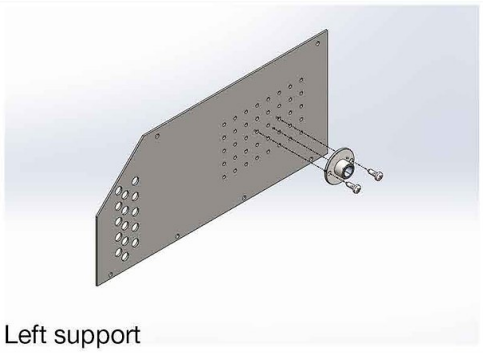

Left support

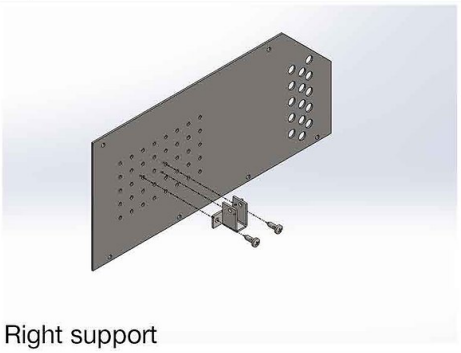

Right support

6a. Wrapped diameter obtainable by measuring the wrapped shutter as received.

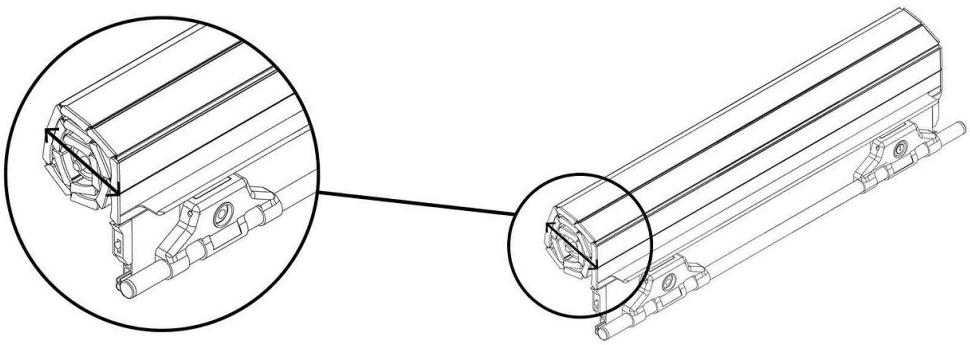

7. Place the roll in its holders, **KEEP THE BLACK BAND DOWNWARDS**.

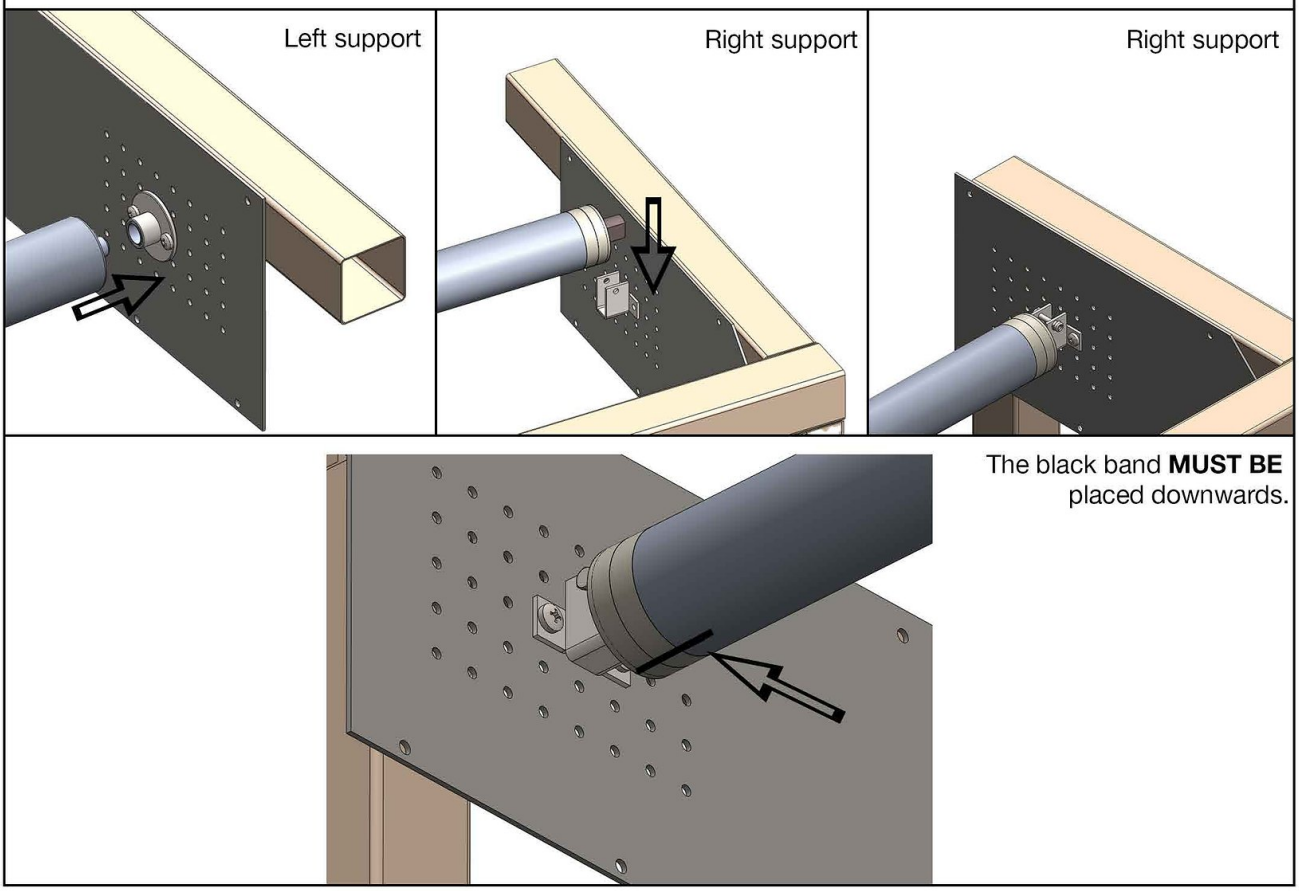

Seals and optional fittings

8. Mark on the guide the intersection point between the guide and the little cover - L profile 50x20
The mark will help you to knoe the correct measure of the seal rubber.
After that **REMOVE** the guides.

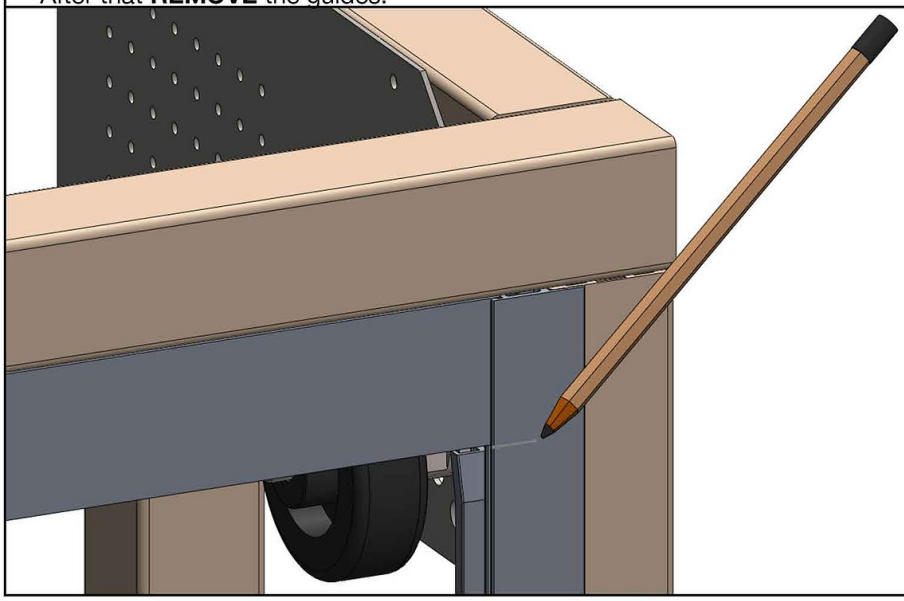

9. Cut the seal rubber diagonally and insert it in the guides, after that cut to measure considering the mark made before (point 6).

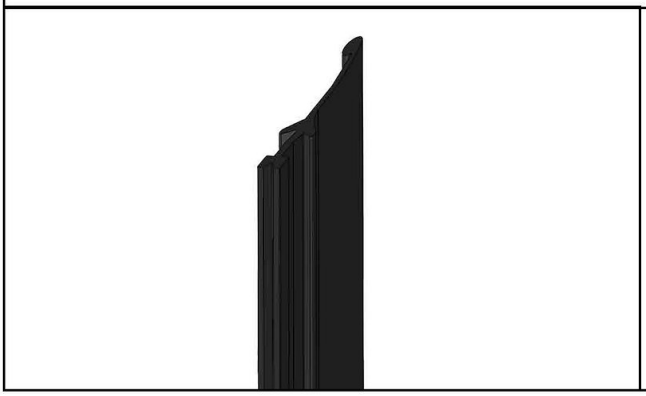



10. If you mount T2 closing system and/or, as optional you have LED, microswitch, pulling belt, insert into the guide the supplied bolts, for their fixing, as the image below.
Insert the bolts in the left or right guide, or both, in a necessary quantity for the required fixing.

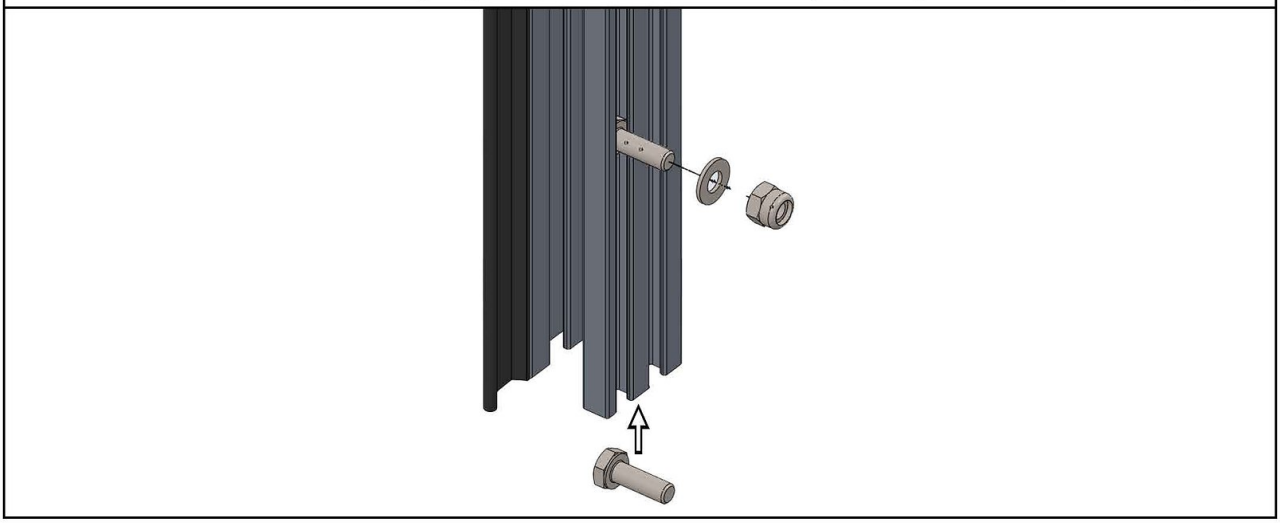

Shutter installation and belts

11. Place the shutter above the roll, bringing it to its maximum opening (A).
Place the guides and make sure that the shutter reamins inside them (B);
Complete any drilling and countersinking of the guides and fix them (C).

A

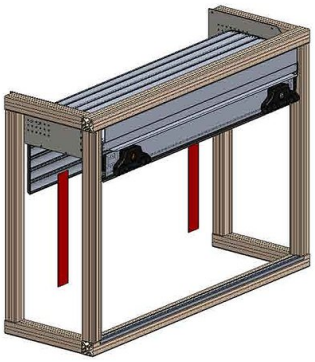

B

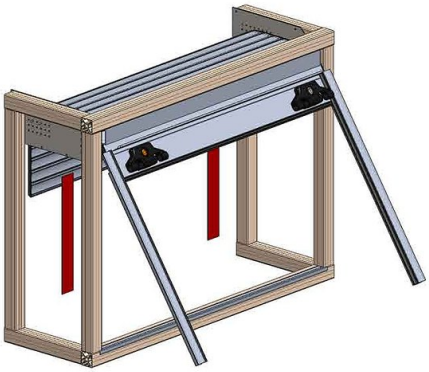

C

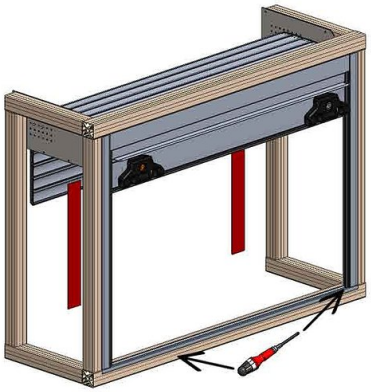

12. Fix the straps to the roll through the supplied rivets - rivets 4,8 x 12 - T16 (A).
Remove the protection paper from the roll (B)
ATTENTION: The safety pin will come off and the roller will be in charging position.
Hold the roller by turning it a half turn towards the inside of the compartment (C).
WARNING: The shutter will completely roll up.

A

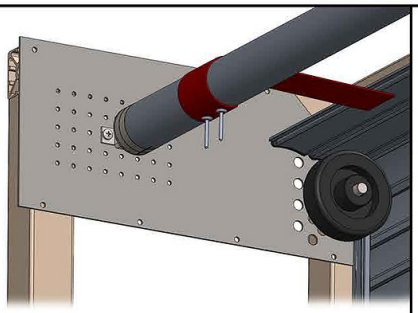

B

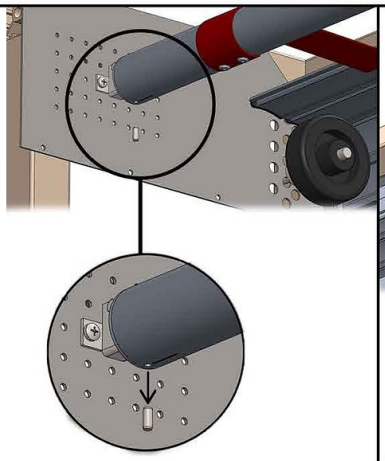

C

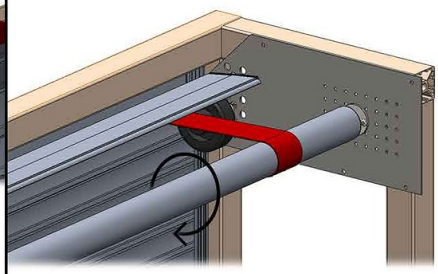

Closing systems T3 and T5

CLOSING SYSTEM T3 & T5

13. Insert the tube ø20 (WS + 20 mm) into the blocks (A). After that insert the plugs (B).
Drill and fix the tube to the blocks by the supplied rivets - rivets 4 x 16.

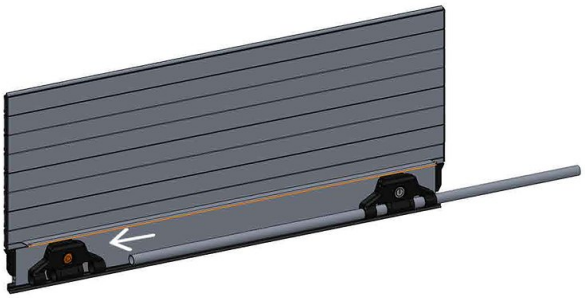

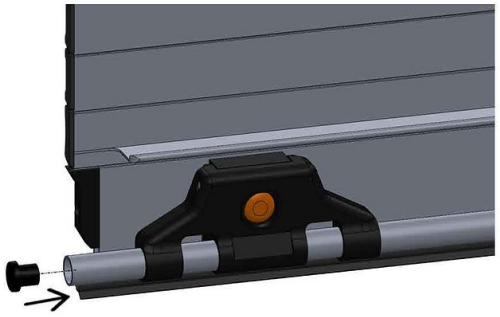

14. Insert the bar in the lower locking, place and fix them correctly by the supplied rivets - rivets 4 x 16.

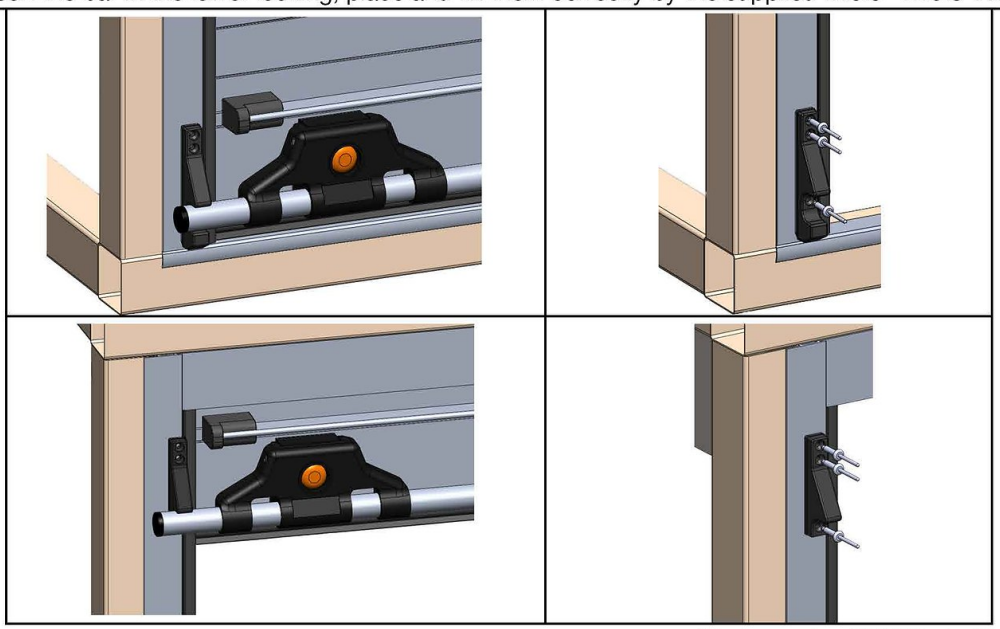

Closing system T5 ‘Tribarlock’

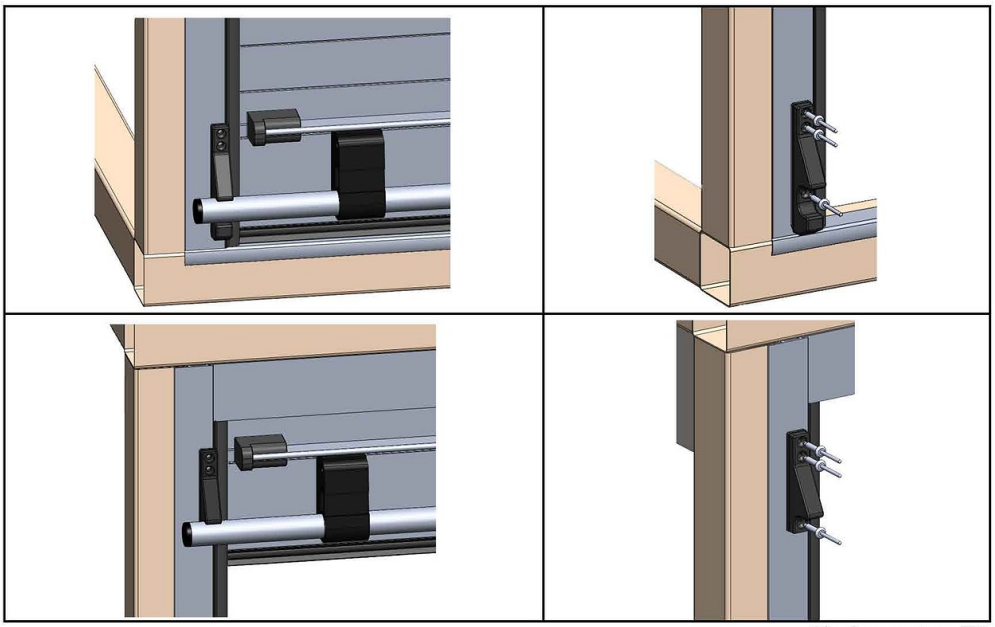

Closing system T3

T2 closing system and gutter profile

CLOSING SYSTEM T2
14A. Set the upper block (A) and fix the lower locking fort T2 (B).

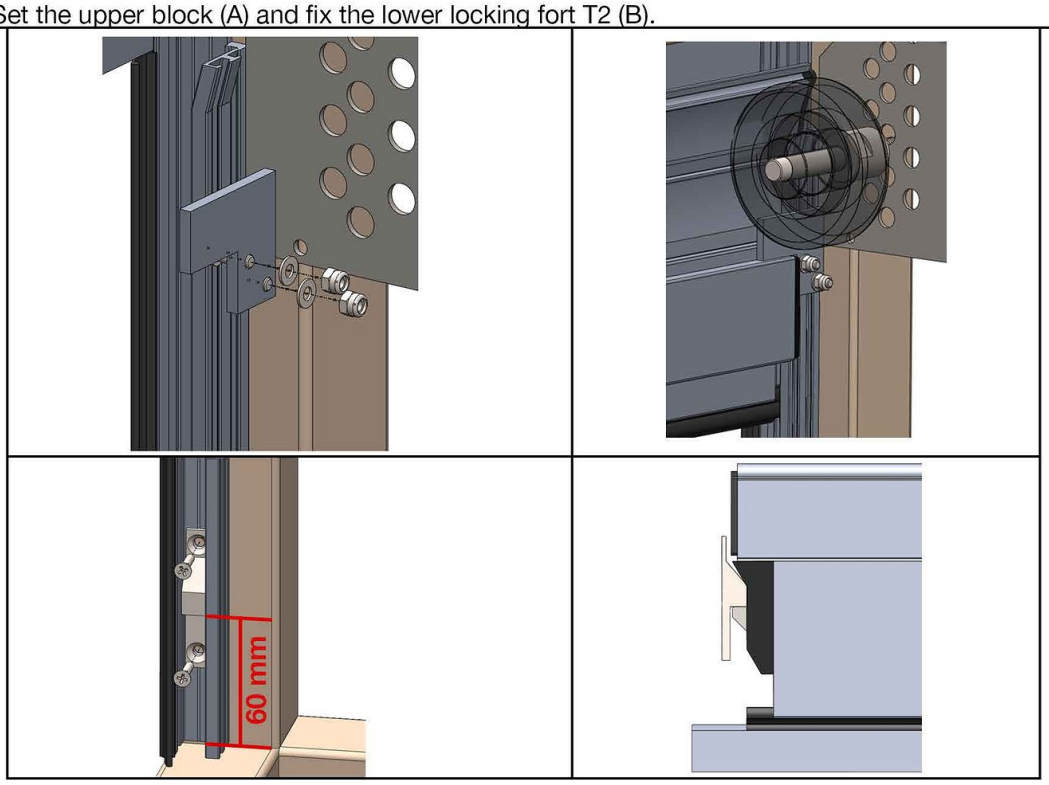

15. Drill and fix the gutter profile (optional). Insert the rubber, if you chose the big gutter profile

BIG GUTTER PROFILE

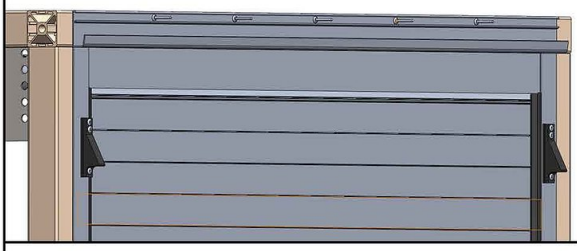

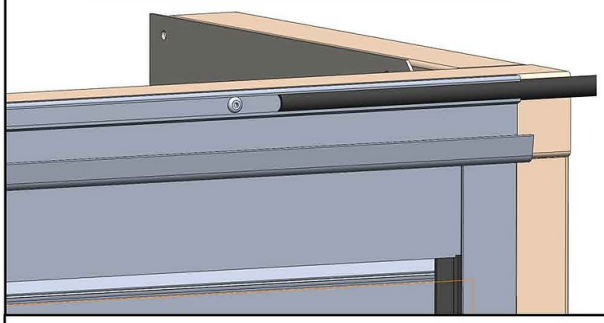

SMALL GUTTER PROFILE

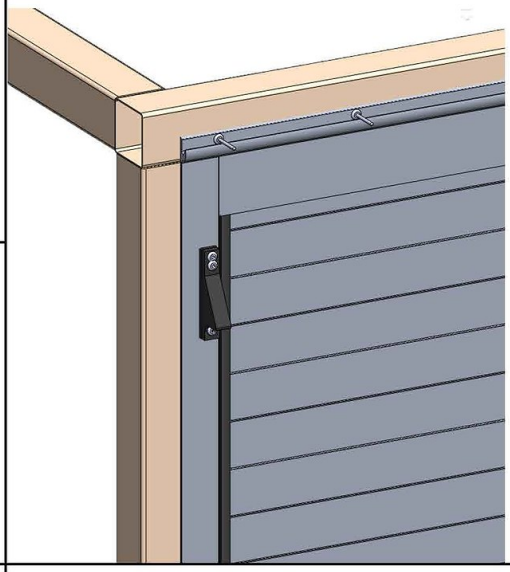

BIG GUTTER PROFILE



SMALL GUTTER PROFILE



Pull belt and completed installation

16. Drill and fix one end part of the pulling belt by the supplied screws. Hole ø4.
With the shutter open, fix the other end part of the belt to the side wall of the compartment.

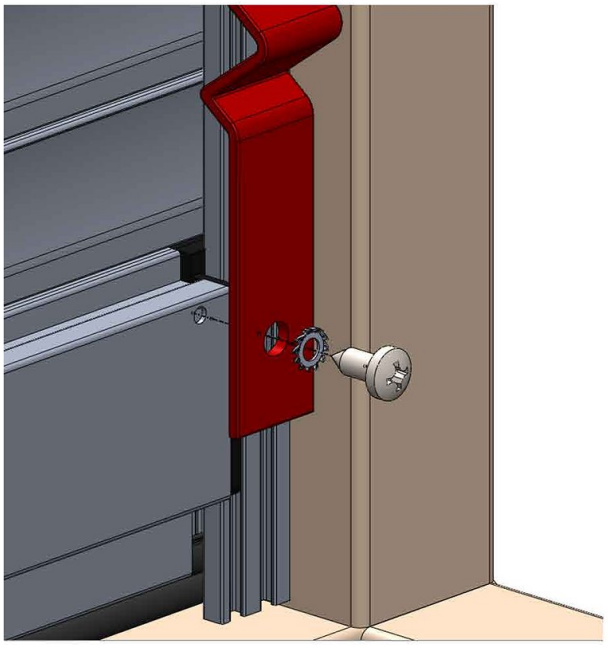

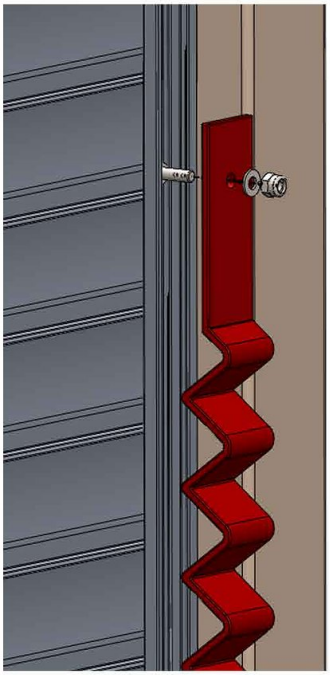

17. The shutter is ready to be used. For a better sliding over time, it is recommended to grease the side guides with standard mechanical grease.

