ROLLER SHUTTER

ECO SIMPLY & ECO SIMPLY PLUS

Installation instructions



Contents

PARTS REFERENCE

Common parts 02

Exploded view 03

ASSEMBLY

Lower profile, curves and guides 04

Track extensions and rear curves 05

Seals, shutter and guides 06

ECO SIMPLY PLUS ROLLER

Roller supports and belts 07

Belt fastening and roller engagement 08

CLOSING SYSTEMS

Closing system T1 09

Closing system T2 10

T2 upper block 11

T3 and T5 tube and lower blocks 12

T3 and T5 upper locking blocks 13

FINISHING

Gutter profile and pull belt 14

Completed installation 15

Common parts

Common parts

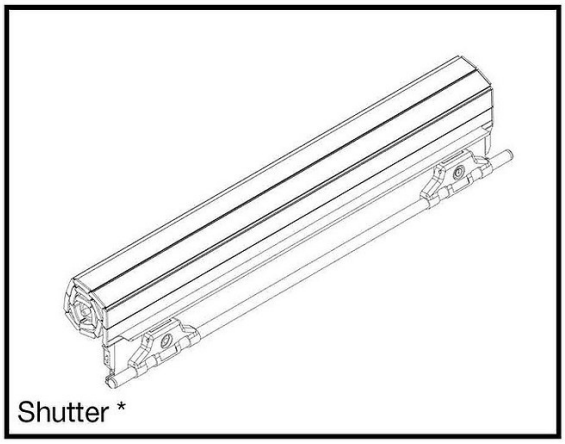
Shutter *

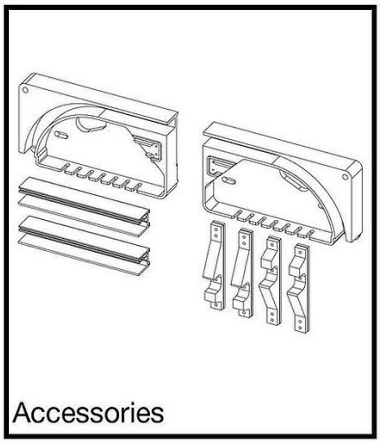
Accessories

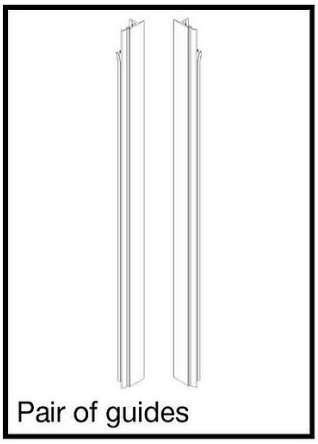
Pair of guides

Num. Art.	Codice Code	Descrizione	Description	Q.tà Q.ty
1	70500	Terminale T5	Closing group T5	1
2	70308	Aglas inferiore per T3 e T5	Lower locking for T3 and T5	2
3	70311	Profilo di presa	Grip profile	1
4	70001.30/A 70001.38/A	Profilo serranda H30 Profilo serranda H38	Shutter profile H30 Shutter profile H38	N
5	70004	Gomma intermedia	Middle rubber for shutter profile	N
6	70002.DX.30 70002.DX.38	Pattino destro H30 Pattino destro H38	Right sliding plate H30 Right sliding plate H38	N
7	70002.SX.30 70002.SX.38	Pattino sinistro H30 Pattino sinistro H38	Left sliding plate H30 Left sliding plate H38	N
8	70311.B	Tappo per profilo di presa	Plug for grip profile	2
9	70003.MP8/A	Guida SIMPLY	Side profile SIMPLY	2
10	70005	Gomma guide di tenuta anteriore	Seal rubber	2
11	70309	Aglas superiore per T3 e T5	Upper locking for T3 and T5	2
12	70036.DX	Curva in plastica Destra - SIMPLY	Right plastic curve - SIMPLY	2
13	70036.SX	Curva in plastica Sinistra - SIMPLY	Left plastic curve - SIMPLY	2
14	70037	Prolunga tra le curve - SIMPLY	Extension between curves -SIMPLY	2
15	70038	Prolunga posteriore - SIMPLY	Back extension - SIMPLY	2
16	70020	Rullo ø45	Roll ø45	1
17	70017	Sede-supporto per rullo (DX)	Roll space	1
18	70018	Supporto perno con bronzina per rullo (SX)	Pin with bearing (L)	1
19	70011.S 70011.B	Profilo gocciolatoio PICCOLO Profilo gocciolatoio GRANDE con gomma	SMALL gutter profile BIG gutter profile with rubber	1
20	70014.S 70014.B	Profilo battuta PICCOLO Profilo battuta GRANDE	SMALL lower profile BIG gutter profile	1

* ECO SIMPLY PLUS model includes a pre-charged roll.

Exploded view

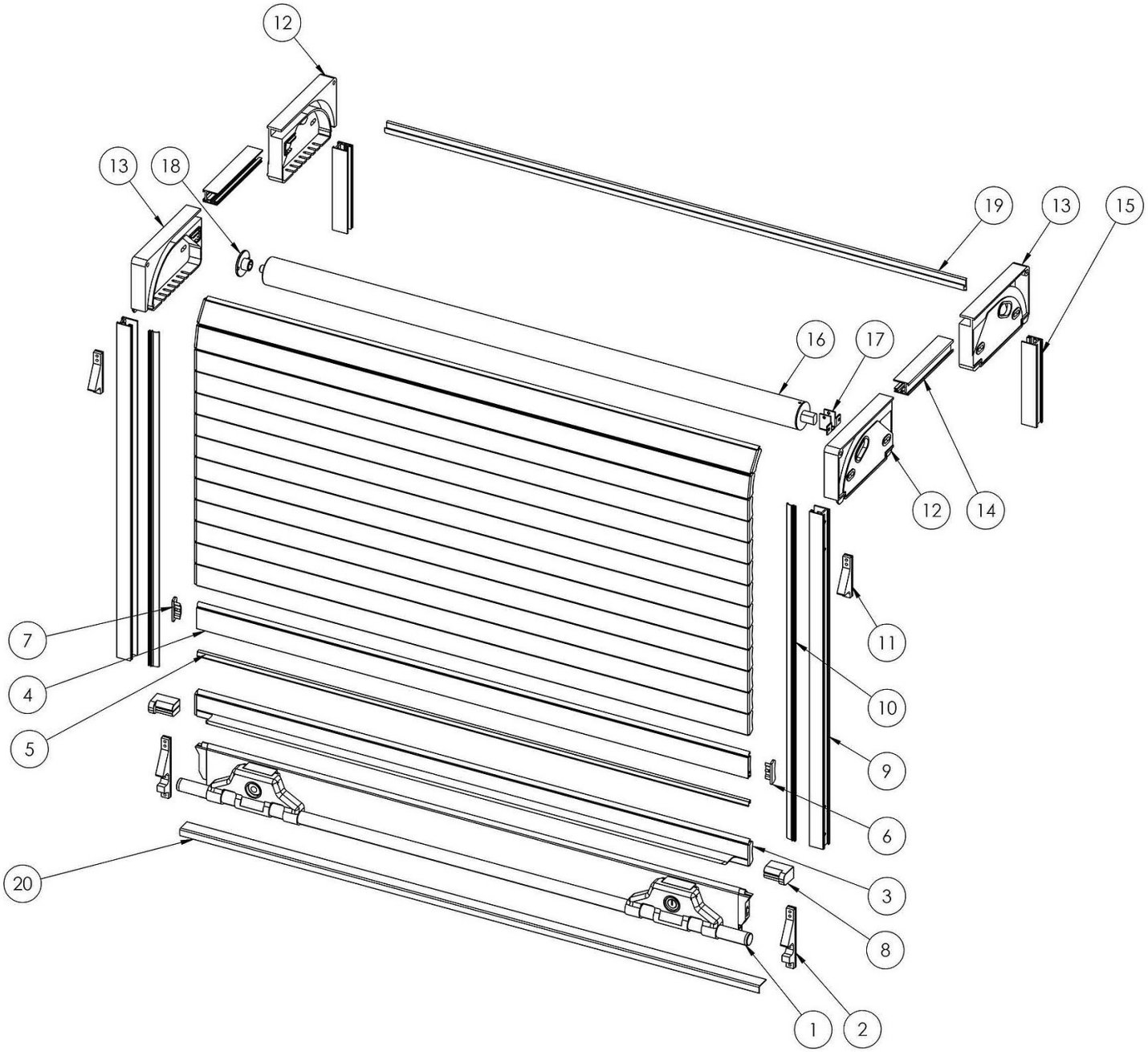

Lower profile, curves and guides

1. Drill and fix the lower profile (optional).

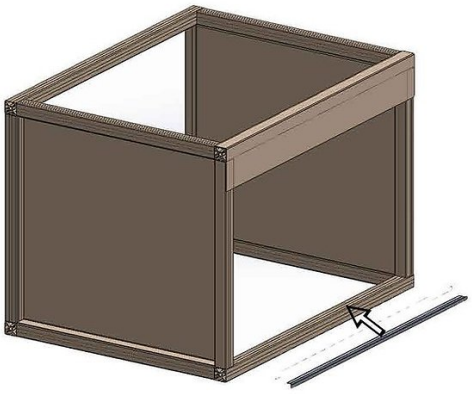

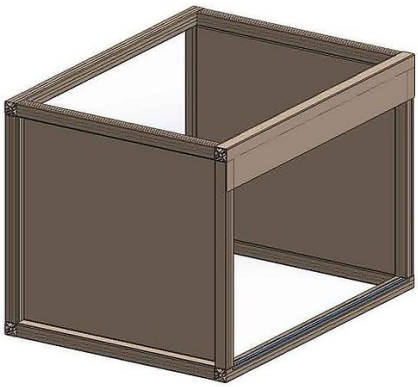

BIG LOWER PROFILE



SMALL LOWER PROFILE



WARNING: The cover needs to be made by the customer as part of the bodywork. Minimum length 100 mm.

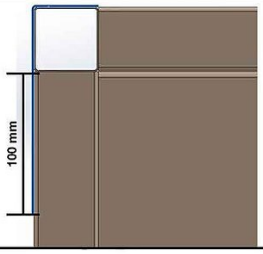

2. Drill and fix the curves.

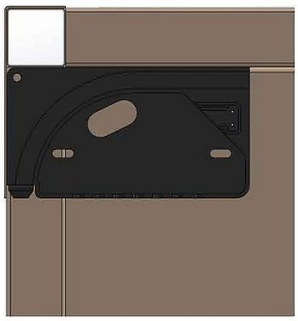

A. Fixed in light.

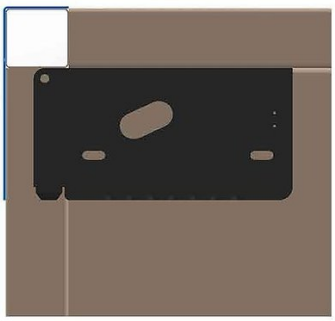

B. Fixed in retracted position.

3. Fix the guides temporarily, connecting them with the curves in the appropriate seat.

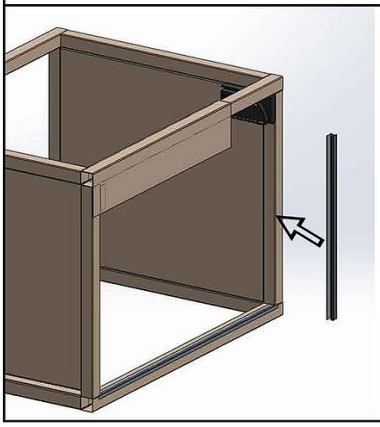

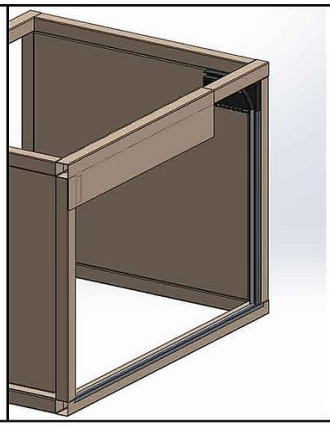

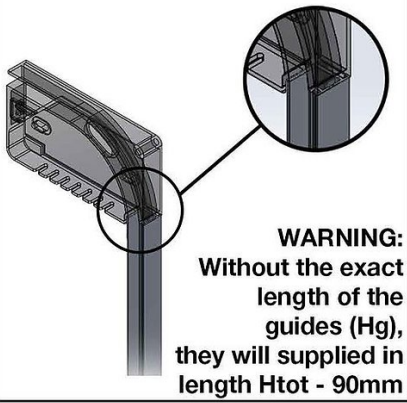

WARNING: Without the exact length of the guides (Hg), they will supplied in length Htot - 90mm

Track extensions and rear curves

4.a Drill and fix* the extensions. P > H

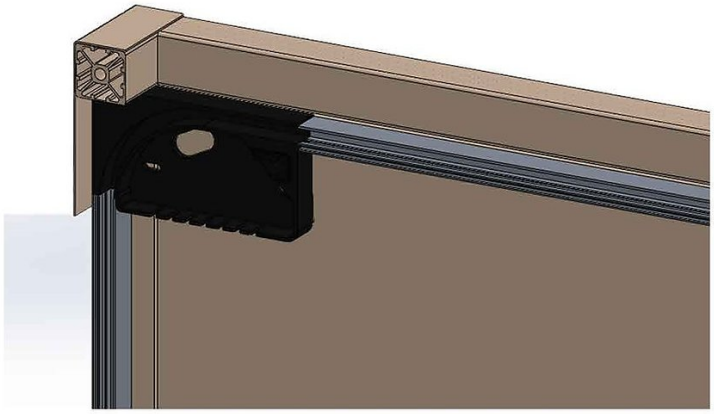

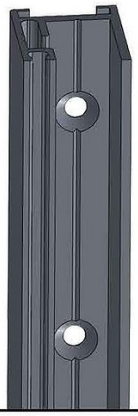

Drill and countersink along the central groove.

4.b Drill and fix* the second curve. H > P



4.c Drill and fix* the seconde curve and the black extension. H > P

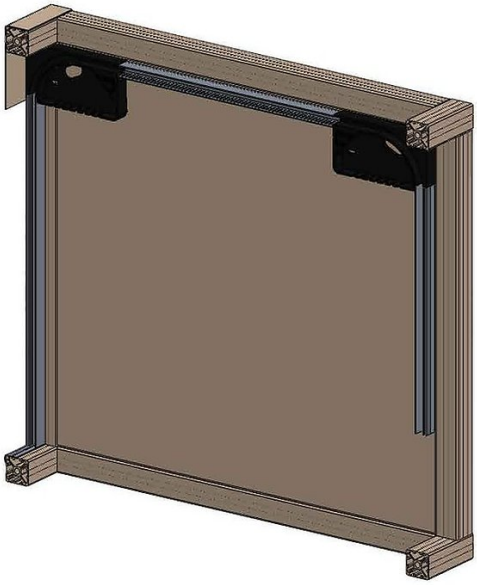

*** It is recommended to use screws TPS ø3.5x19**

REMOVE THE GUIDES.

Seals, shutter and guides

5. Cut the seal rubber diagonally and insert it into the guides.





6. Insert the shutter in the curves and bring it to the maximum opening.

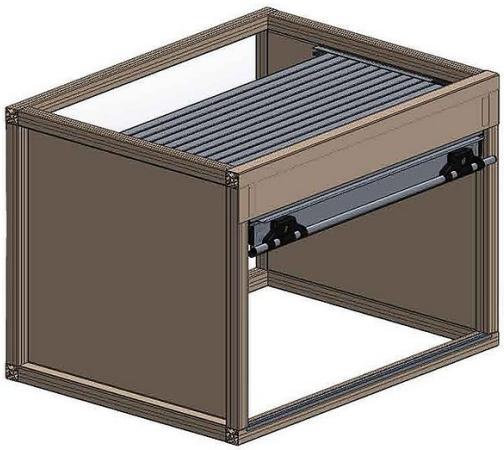

7. Assemble the guides by inserting the shutter and fix them.



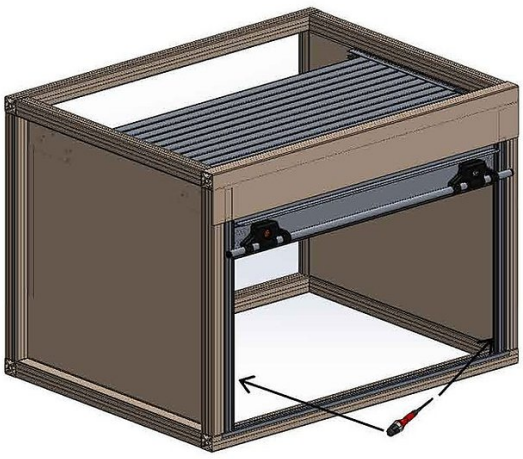

Roller supports and belts

FROM STEP 8 TO 12 ONLY FOR *ECO PLUS*
VERSION WITH PRE CHARGED ROLL

8. Drill and fix the holders under the curves. Use the TC 4.8 x12 screws supplied.

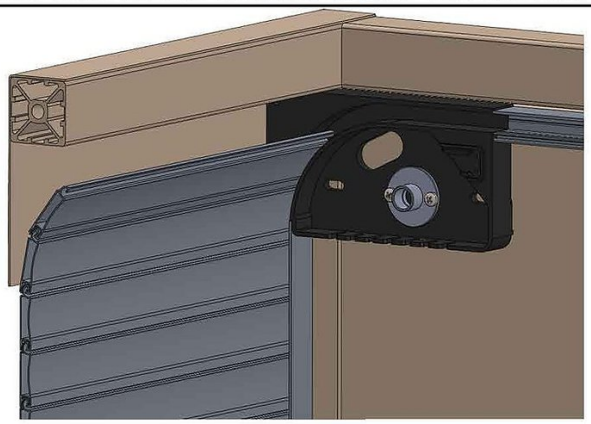

LEFT SUPPORT

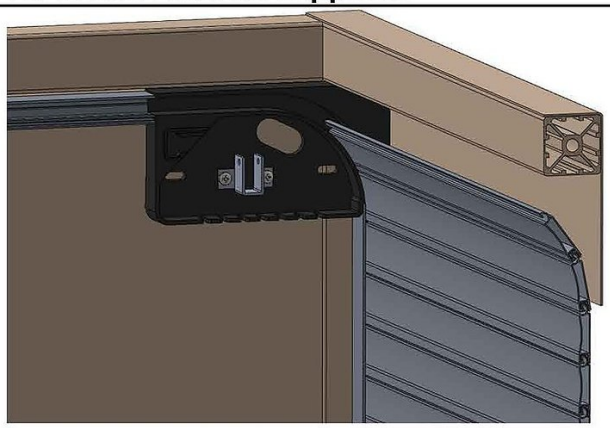

RIGHT SUPPORT

9. Assemble the roll in the appropriate supports.

A.

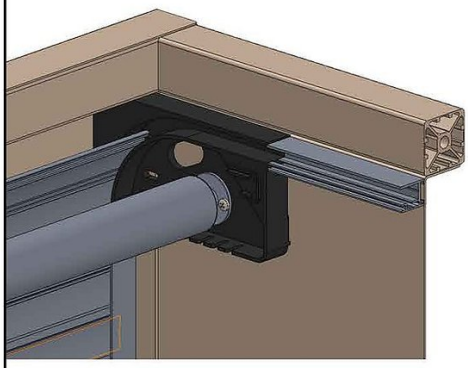

LEFT SUPPORT

B.

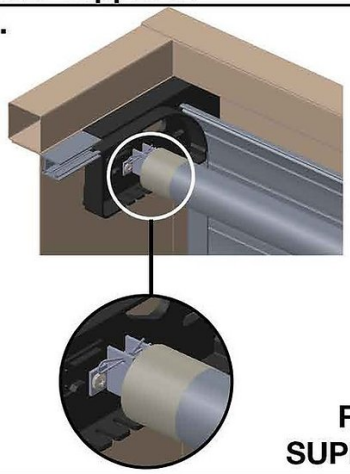

RIGHT SUPPORT

C.

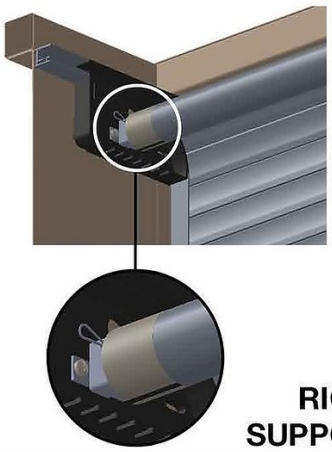

RIGHT SUPPORT

WARNING: Insert the beta pin in the right support (B);
The black band on the roller must be facing downwards (C).

10. Unwind the belts until they reach the last shutter profile at the bottom.

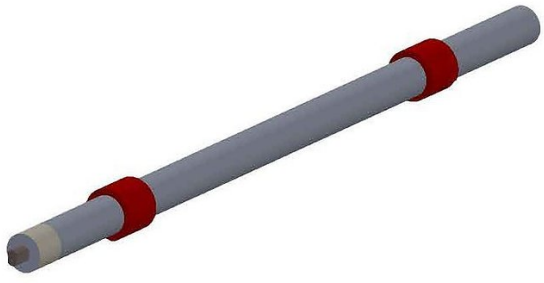

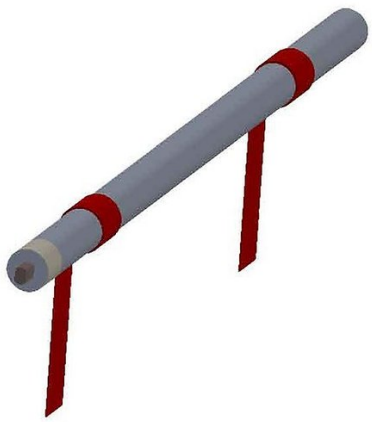

Belt fastening and roller engagement

11. Fix the belts to the last shutter profile at the bottom using the plates and rivets provided.

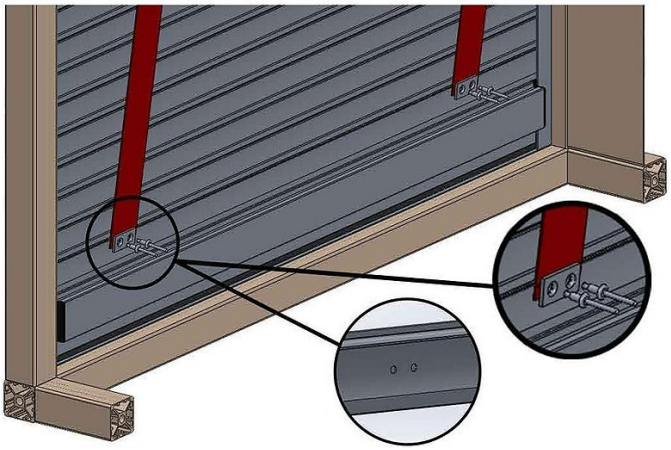

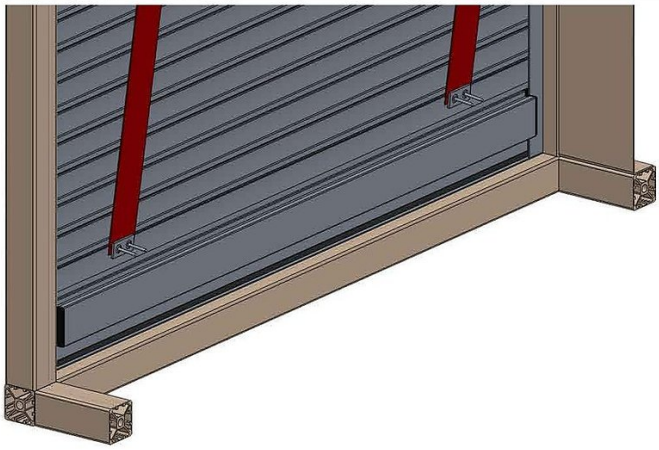

12. Remove the paper from the roll, the black band must be facing downwards.
WARNING: The safety pin will come off and the roller will be in charging position.

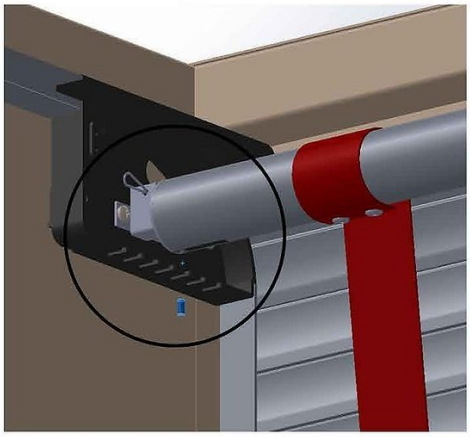

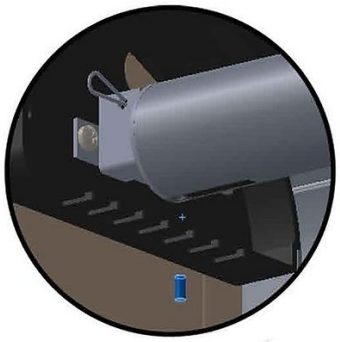

13. Hold the roller by turning it halfaway towards the inside of the compartment.
The belts will wind up and the shutter will slide all the way under the roof.

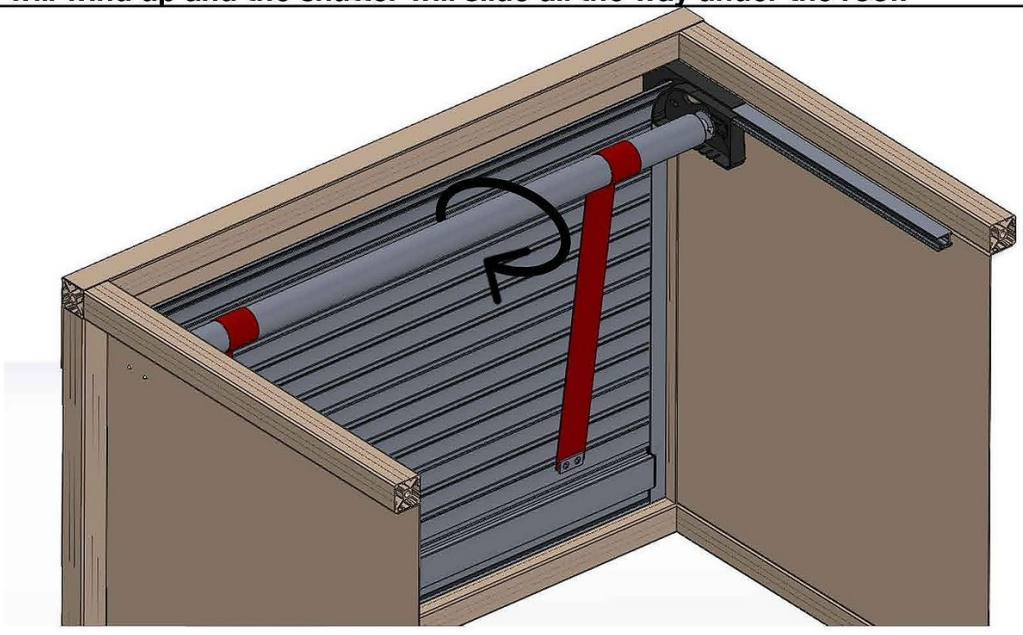

Closing system T1

FIXING CLOSING SYSTEM T1
14.A Fix the plate to the frame.

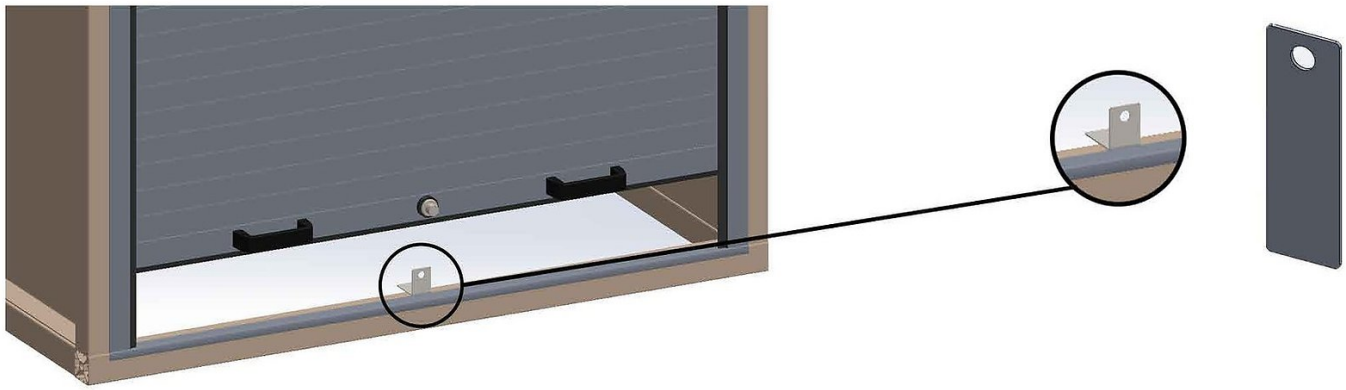

14.B - One curve and one extension, fix the holding springs.

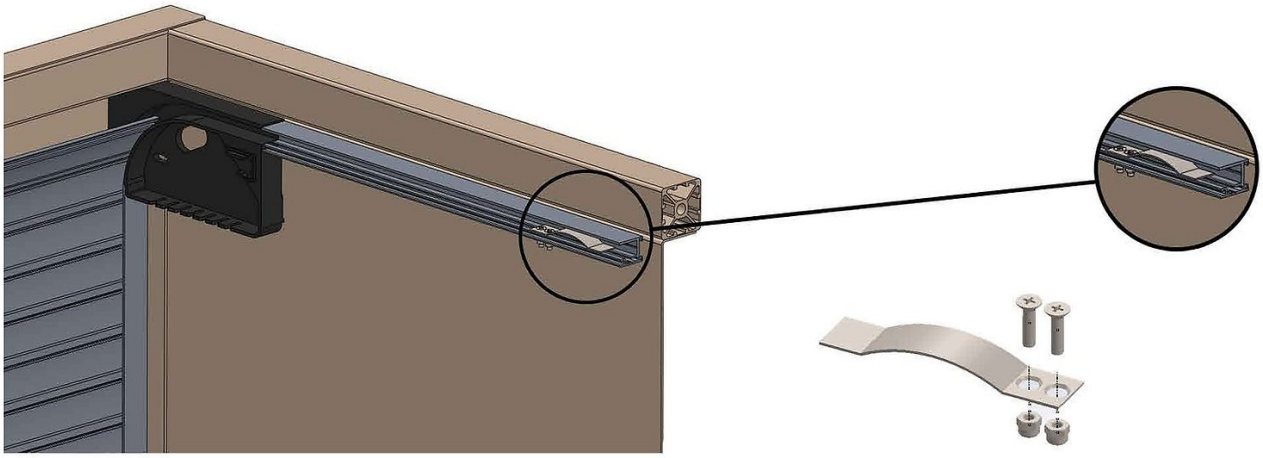

14.C - Two curves and back extension fix the pad.

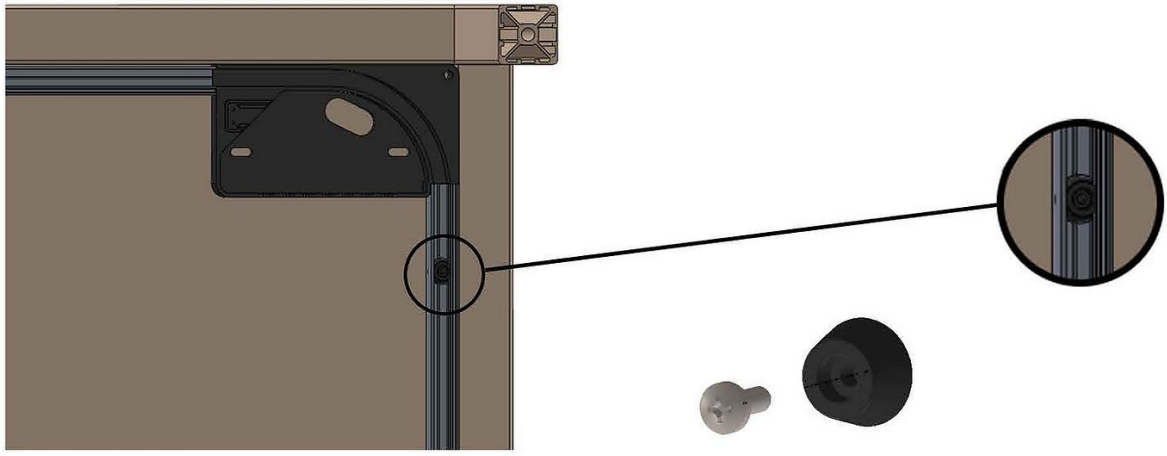

Closing system T2

FIXING CLOSING SYSTEM T2.
15.A - Drill the guide and fix the lower block (aglas) at 60 mm from the ground.

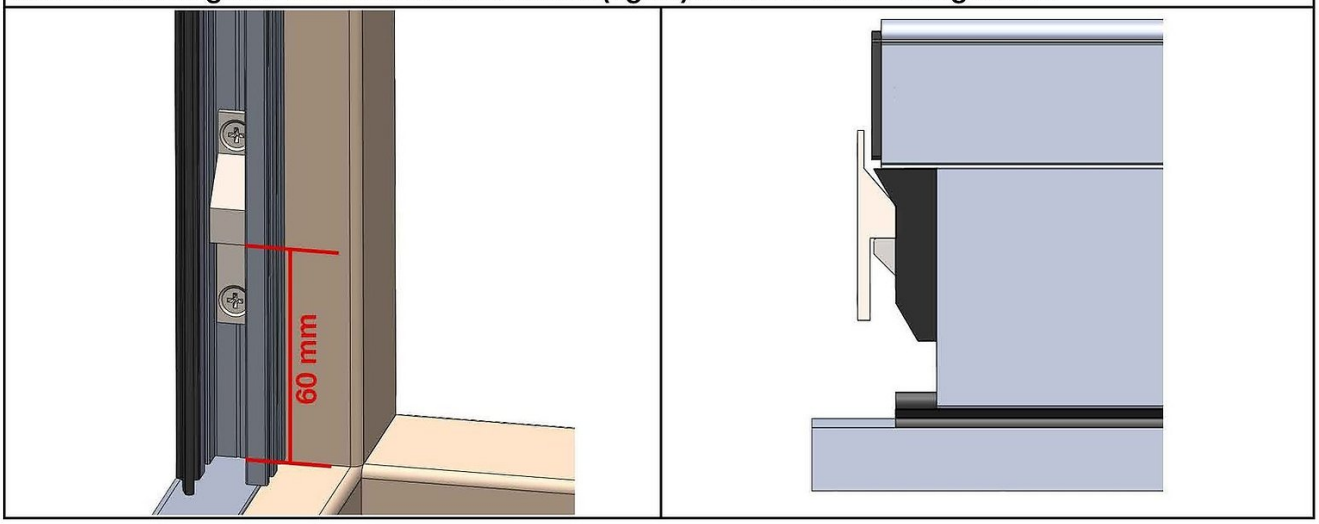

15.B - With one curve and extension, fix the stop spring.

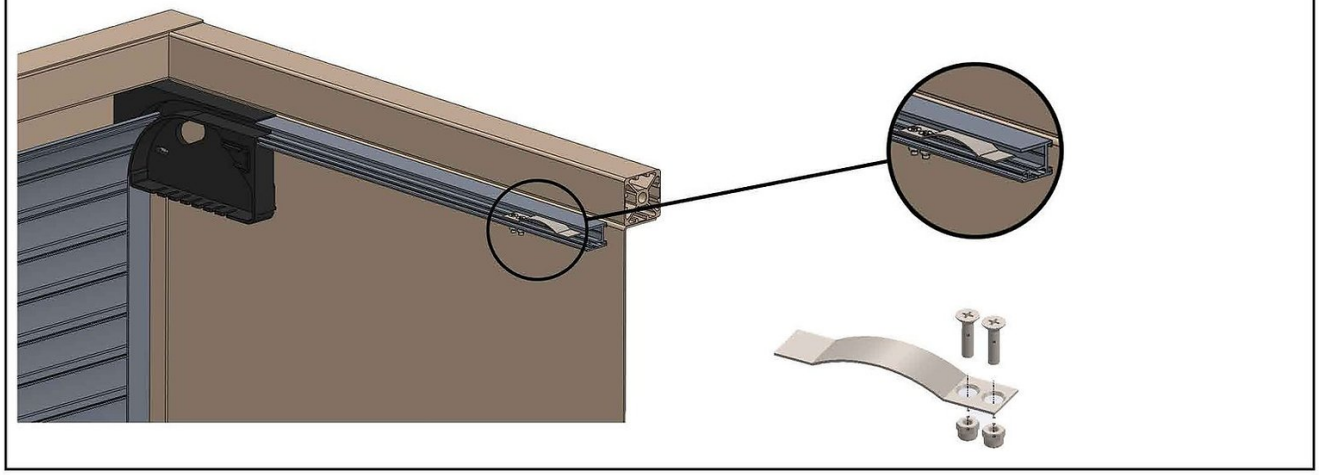

15.C - With second curve and back extension, fix the pads.

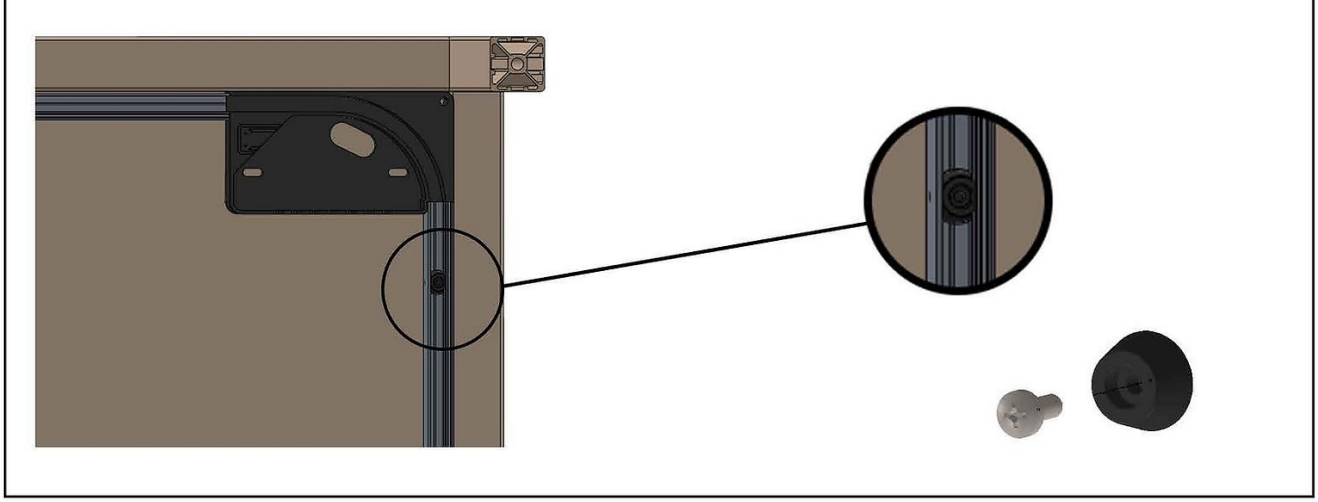

T2 upper block

ATTENTION: If you chose the ECO PLUS SIMPLY version from step 15.A skip to step 15.D

15.D - Fix the upper block.

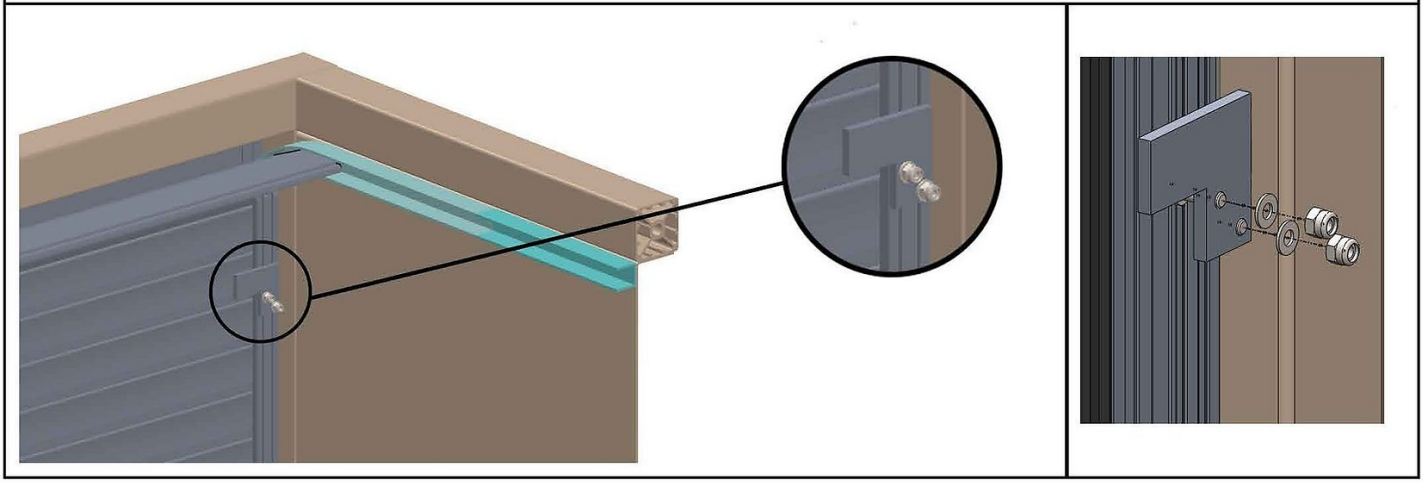

T3 and T5 tube and lower blocks

FIXING CLOSING SYSTEM T3 & T5

16.A Insert the tube ø20 (WS + 20mm) in the blocks (A). After that, insert the plugs in the tube (B).

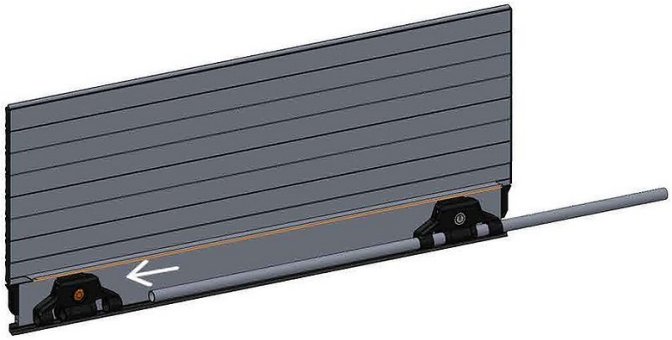

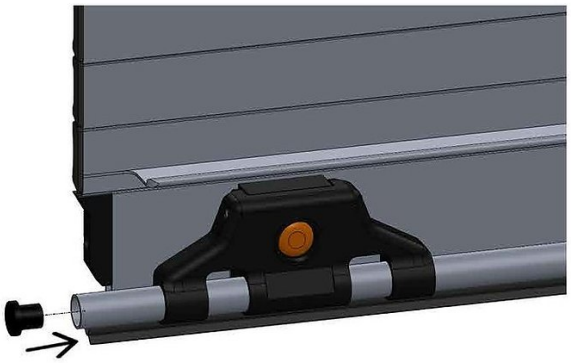

16.B - Fix the lower block (aglas).

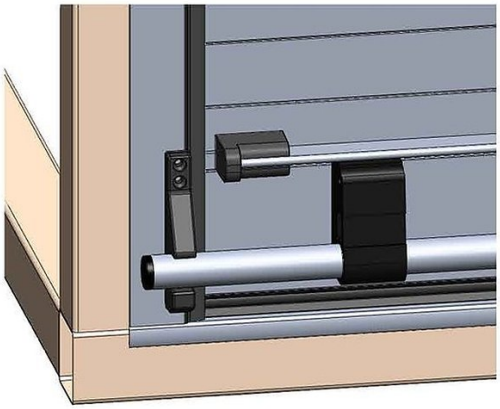

CLOSING SYSTEM T3

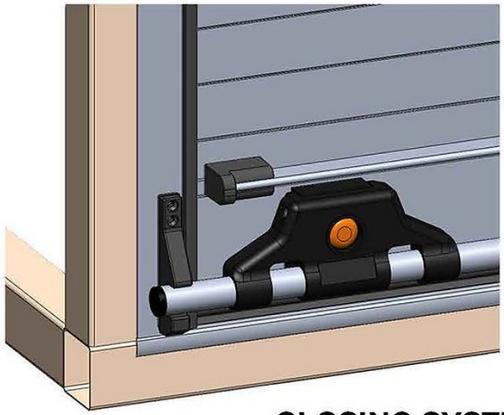

CLOSING SYSTEM T5

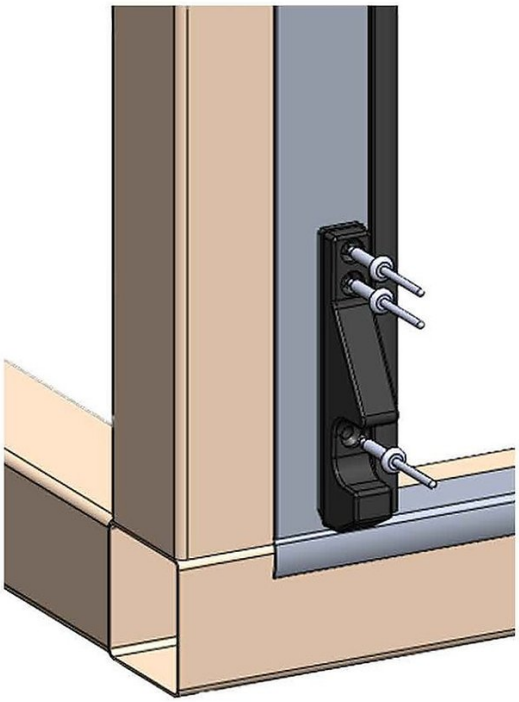

T3 and T5 upper locking blocks

ECO SIMPLY

16.C – Mount the same locking blocks upside down in the upper part of the guide. Bring the shutter to the desired height.

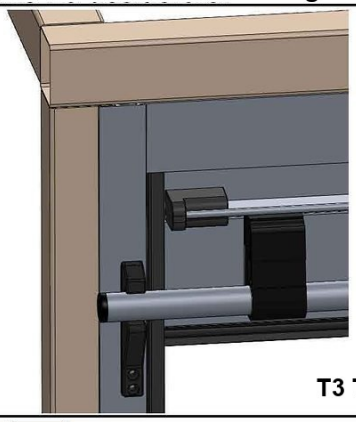

T3 TERMINAL

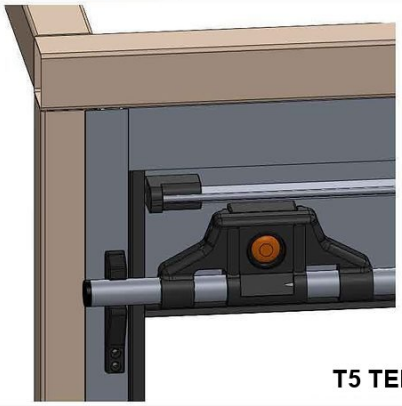

T5 TERMINAL

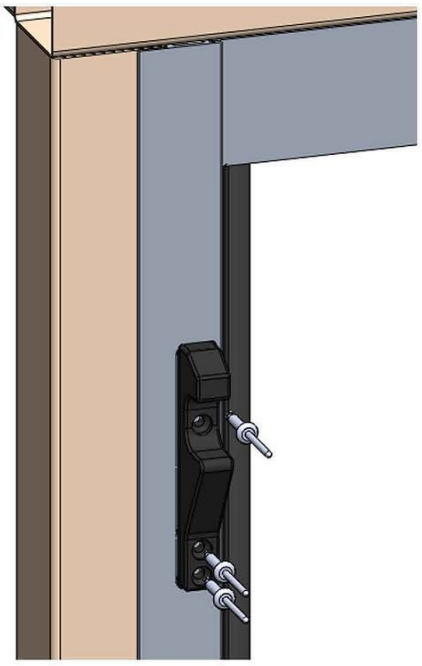

ECO PLUS SIMPLY

16.C – For ECO SIMPLY PLUS, mount the upper locking blocks in the upper part of the guide and bring the shutter to the desired height.

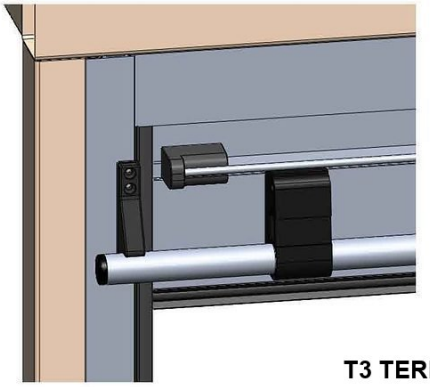

T3 TERMINAL

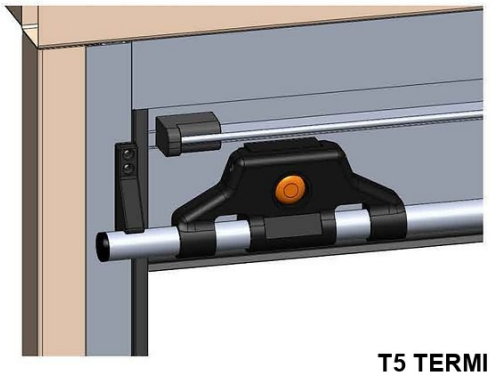

T5 TERMINAL

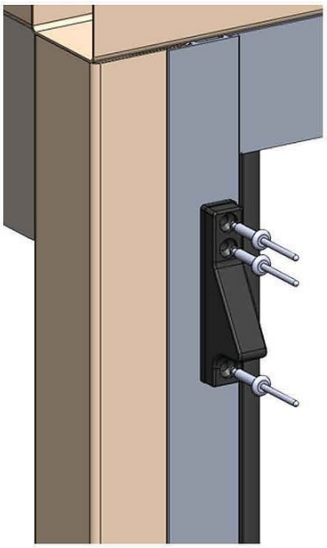

Gutter profile and pull belt

17. Drill and fix the gutter profile (optional). Insert the rubber if you mount the big gutter profile.

BIG GUTTER PROFILE

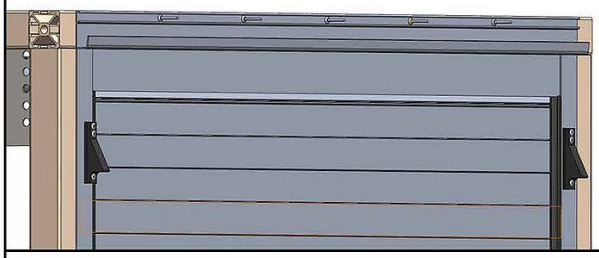

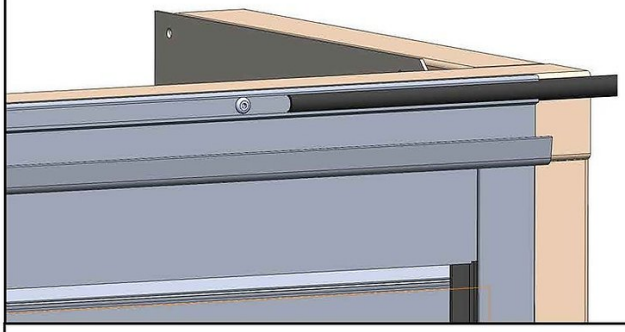

SMALL GUTTER PROFILE

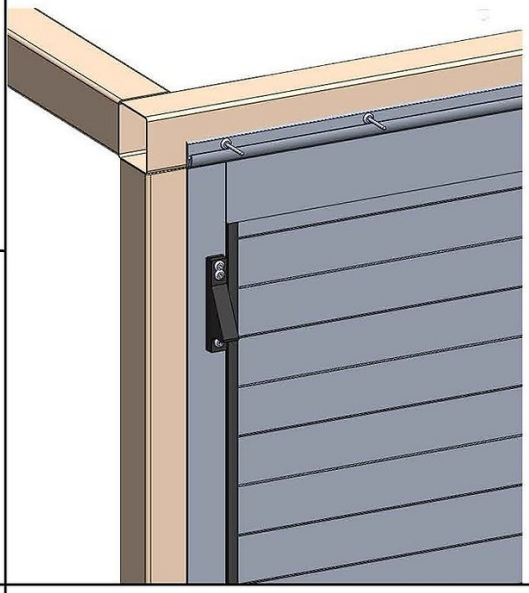

BIG GUTTER PROFILE



SMALL GUTTER PROFILE



18. Drill and fix one end part of the pulling belt by the supplied screws. Holes ø4.
With the shutter open, fix the other end part of the belt to the side wall of the compartment.

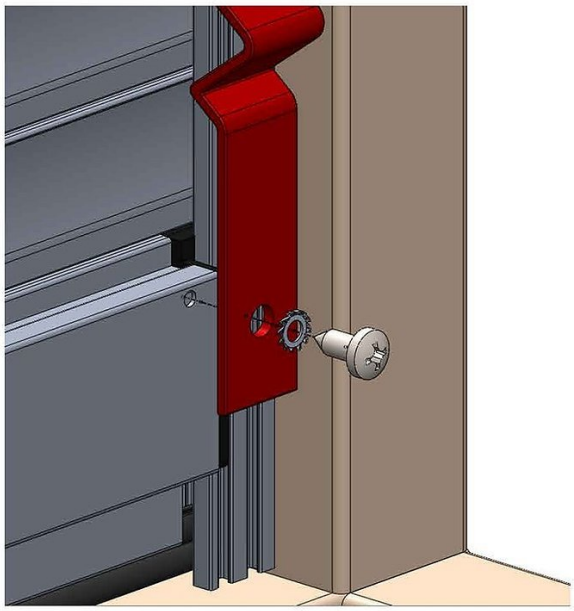

Completed installation

19. The shutter is ready to be used.

