ROLLER SHUTTER

ECO & ECO PLUS

Installation instructions



Contents

PARTS REFERENCE

Common parts 02
Exploded view 03

ASSEMBLY

Lower profile, guides and cover 04
Front curves and extensions 05
Rear track configurations 06
Seals and optional fittings 07
Shutter and guide installation 08

ECO PLUS ROLLER

Roller and belts 09
Roller engagement 10

CLOSING SYSTEMS

Closing system T1 11
Closing system T2 12
T2 upper block for ECO PLUS 13
Closing systems T3 and T5 14
Upper locking blocks 15

FINISHING

Gutter profile and pull belt 16
Completed installation 17

Common parts

Common parts

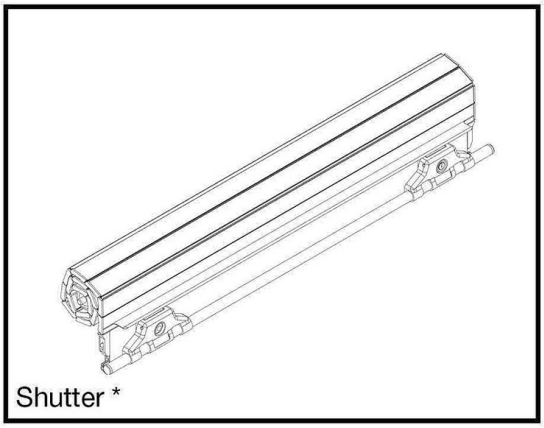
Shutter *

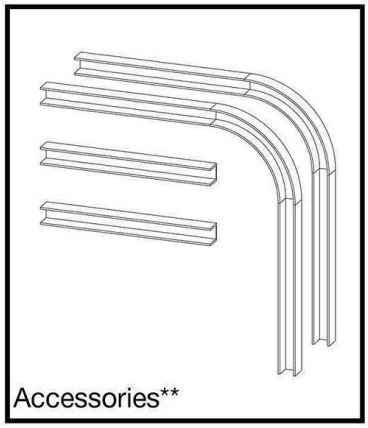
Accessories**

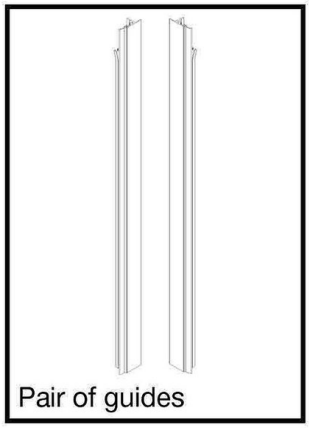
Pair of guides

Num. Art.	Codice Code	Descrizione	Description	Q.tà Q.ty
1	70500	Terminale T5	Closing system T5	1
2	70308	Aglas inferiore per T3 e T5	Lower locking for T3 and T5	2
3	70311	Profilo di presa	Grip profile	1
4	70001.30/A 70001.38/A	Profilo serranda H30 Profilo serranda H38	Shutter profile H30 Shutter profile H38	N
5	70004	Gomma intermedia	Middle rubber for shutter profile	N
6	70002.DX.30 70002.DX.38	Pattino destro H30 Pattino destro H38	Right sliding plate H30 Right sliding plate H38	N
7	70002.SX.30 70002.SX.38	Pattino sinistro H30 Pattino sinistro H38	Left sliding plate H30 Left sliding plate H38	N
8	70311.B	Tappo per profilo di presa	Plug for grip profile	2
9	70003.MP1/A 70003.MP2/A 70003.MP5/A	Guida MP1 Guida MP2 Guida MP5	Side profile MP1 Side profile MP2 Side profile MP5	2
10	70005	Gomma guide di tenuta anteriore	Seal rubber	2
11	70309	Aglas superiore per T3 e T5	Upper locking for T3 and T5	2
12	70020	Rullo ø45	Roll ø45	1
13	70017	Sede-supporto per rullo (DX)	Roll space	1
14	70018	Supporto perno con bronzina per rullo (SX)	Pin with bearing (L)	1
15	70030	Curva in alluminio	Aluminium curve	4
16	70033	Prolunga tra le curve	Extension between curves	2
17	70034	Prolunga posteriore	Back extension	2
18	70012	Angolare superiore 50x20 (copertina)	Little cover 50x20	1
19	70011.S 70011.B	Profilo gocciolatoio PICCOLO Profilo gocciolatoio GRANDE con gomma	SMALL gutter profile BIG gutter profile with rubber	1
20	70014.S 70014.B	Profilo battuta PICCOLO Profilo battuta GRANDE	SMALL lower profile BIG gutter profile	1
21	70042	Cinghia per rullo	Belt for roll	2
22	70043	Piastrina per cinghia	Plate for roller belt	2

* ECO PLUS model includes a pre-charged roll.
** Extensions and back curves supplied according to depth of the compartment.
*** Belts for roll (pos. 21) and plates for roller belt (pos. 22) are supplied only with ECO PLUS model.

Exploded view

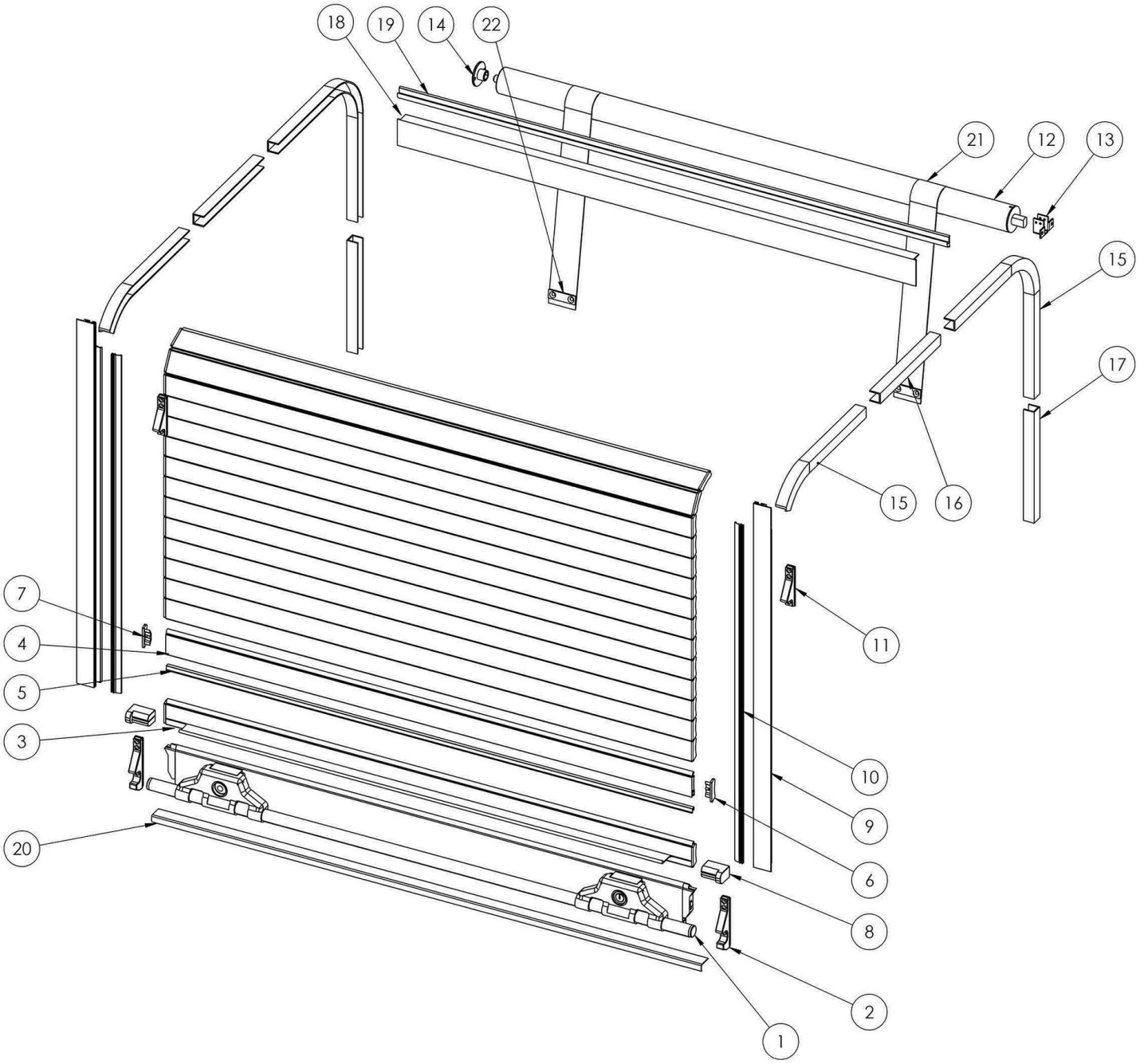

Lower profile, guides and cover

1. Drill and fix the lower profile (optional)

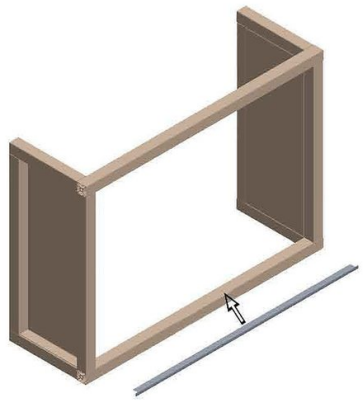

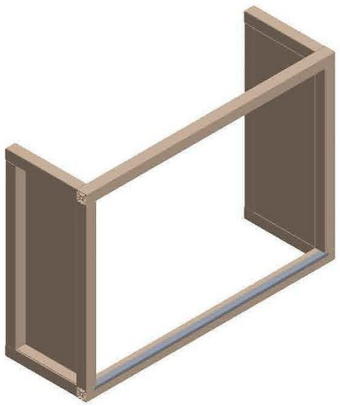

BIG LOWER PROFILE

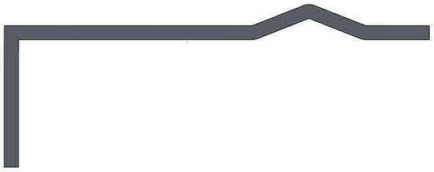

SMALL LOWER PROFILE



Lower profile supplied 25 mm longer than width (Ws) for a correct matching between lower profile and guides.

2. Place the guides and fix them temporarily.

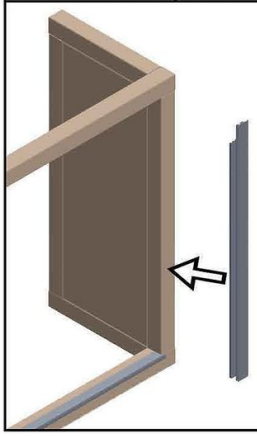

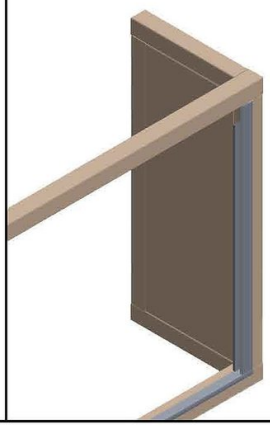

WARNING: Without the exact length of the guides (Hg), they will supplied long as the total height (Htot).

3. Drill and fix the little cover - L profile 50x20 (optional).

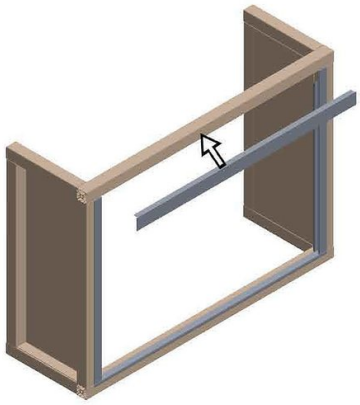

WARNING: The little cover will supplied long as the width (Ws). Shorten and machine it for matching it with the guides.

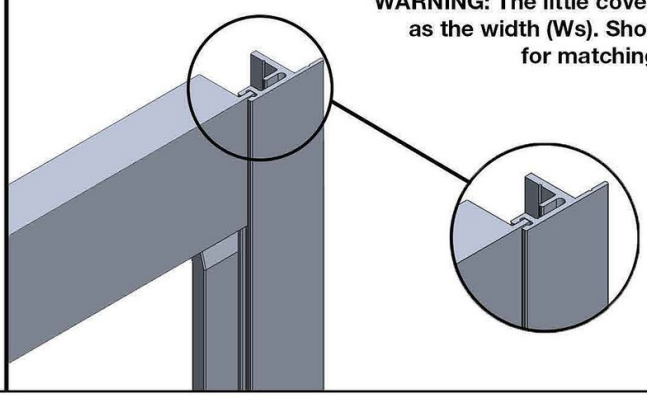

Front curves and extensions

4. Drill and fix the front curves, cut and match them with the guides*

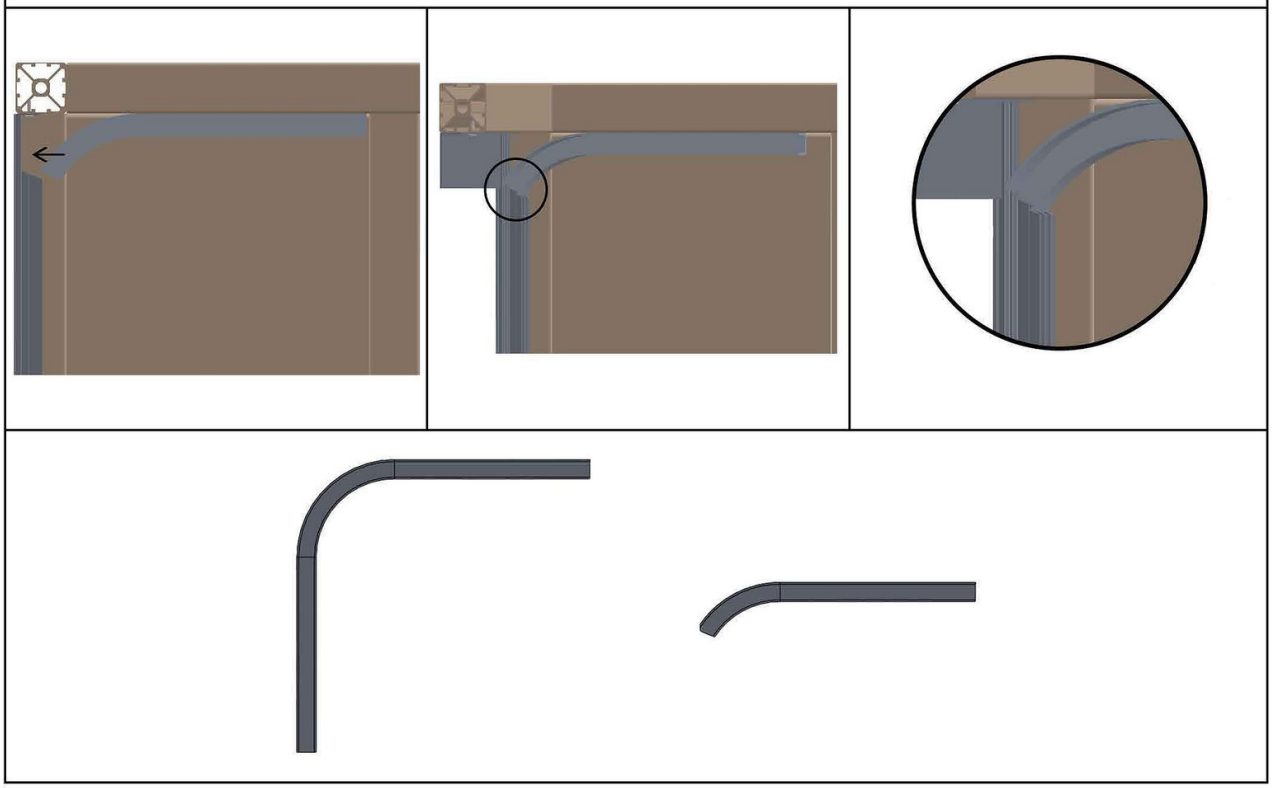

P = compartment depth H = compartment height

5.1 - Drill and fix the extensions*. P > H



5.2 - Drill and fix the second curve*. H > P - CASE A

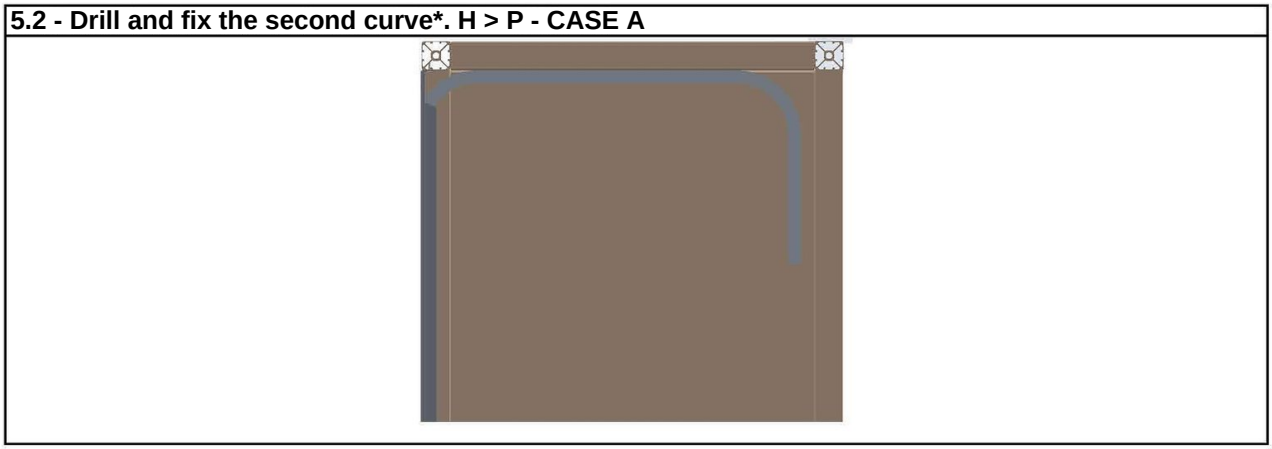

Rear track configurations

5.3 Drill and fix the extensions and the second curve*. H > P - CASE B

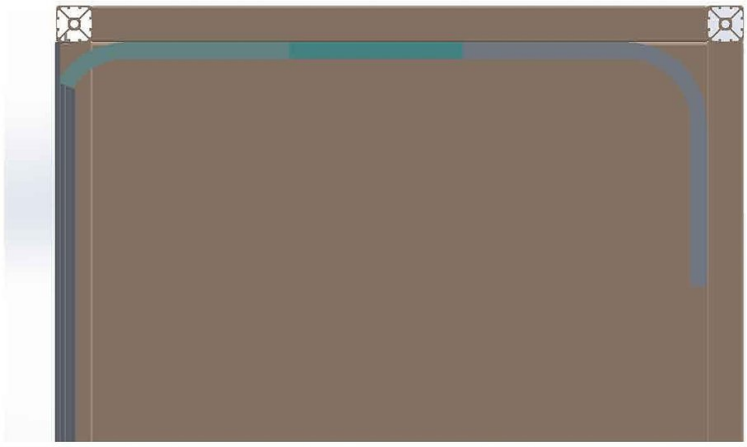

P = compartment depth H = compartment height

5.4 Drill and fix the extensions, the second curves and the back extensions*. - CASE C

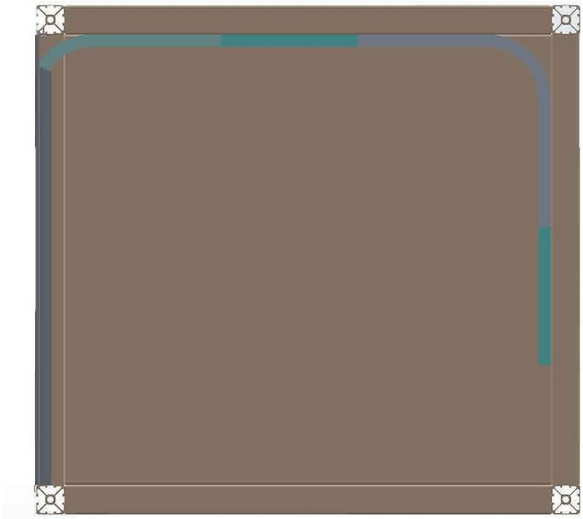

***It is highly recommended to use screws TPS ø3.5 x 19**

Seals and optional fittings

6. Mark on the guide the intersection point between the guide and the little cover - L profile 50x20
The mark will help you to know the correct measure of the seal rubber.

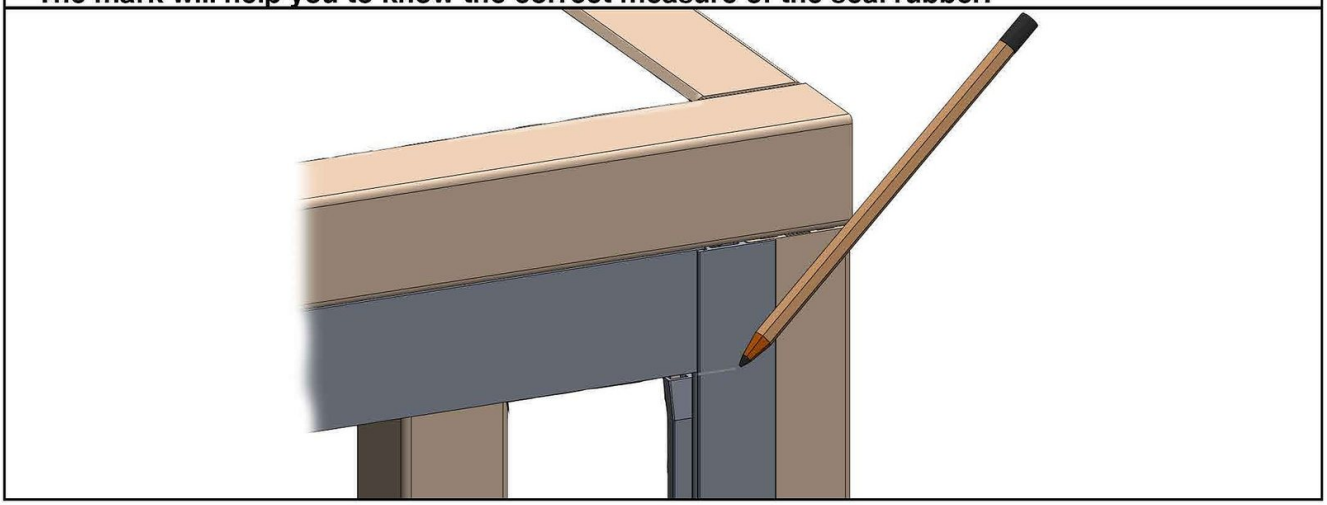

7. Cut the seal rubber diagonally and insert it in the guides,a fter that cut to measure considering the mark made before (step 6).

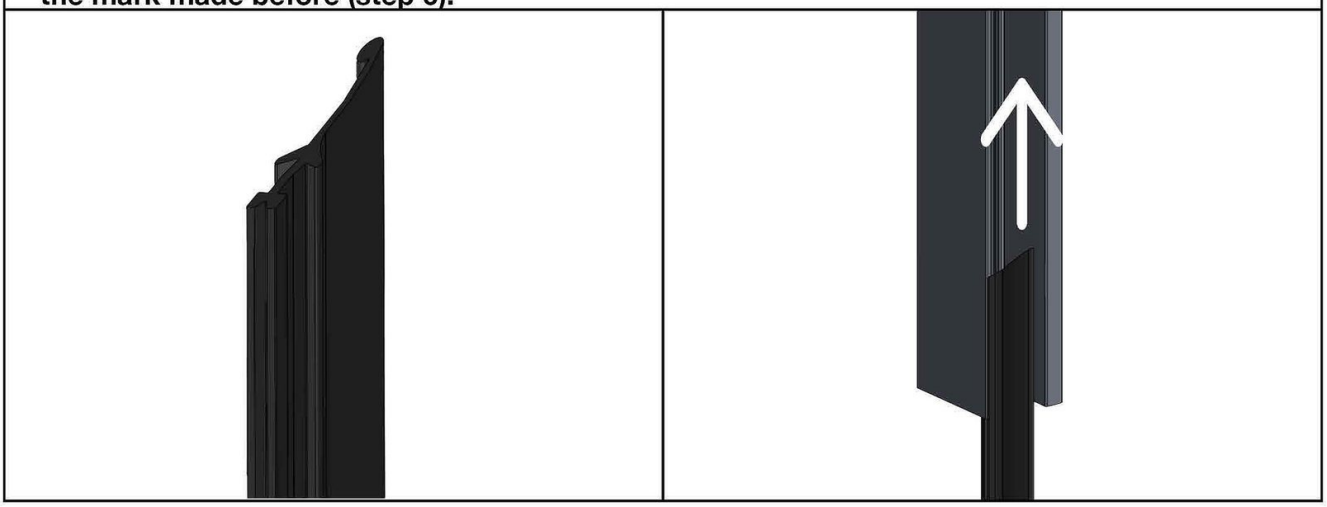

8. If you chose the T2 closing system and/or, as optional, the LED the microswitch, the pulling belt, insert the bolts as the following figure.

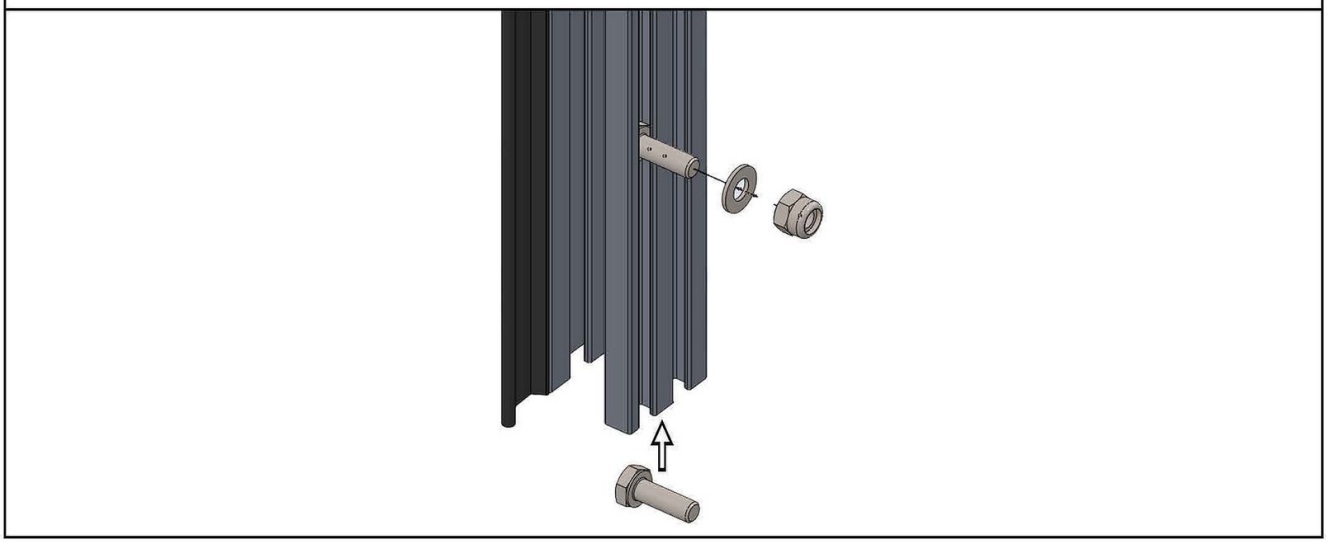

Shutter and guide installation

9. Insert the shutter in the curves and bring it to the maximum opening.

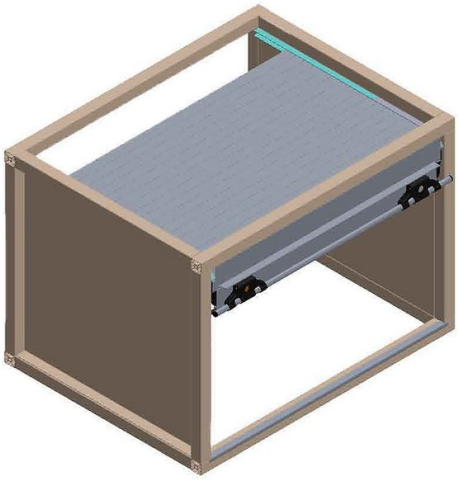

10. Insert the guides and fix them*.

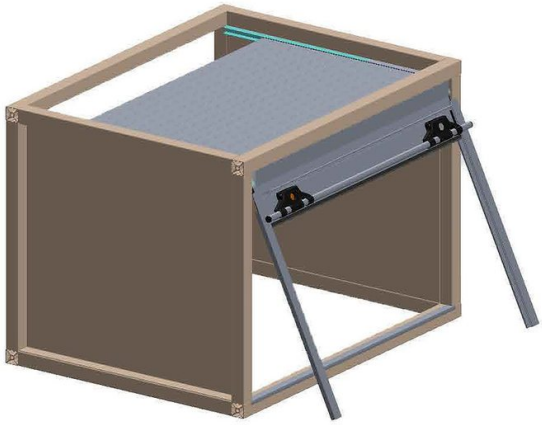

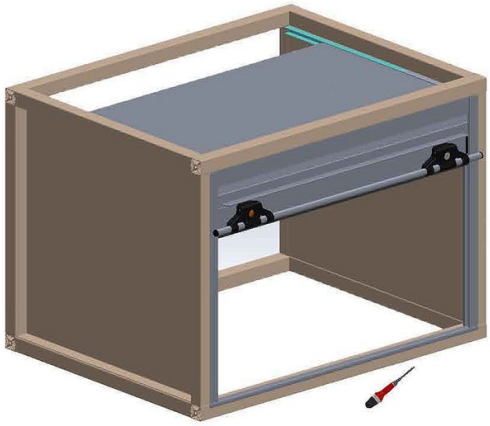

* It is highly recommended to use screws TPS ø3.5 x 19.

FROM STEP 11 TO 15 ONLY FOR *ECO PLUS VERSION* WITH THE PRE CHARGED ROLLER

11. Drill and fix the holders under the curves, according to the wrapped of the belts.
Use TC ø4.8 x 12 supplied screws.



Left support

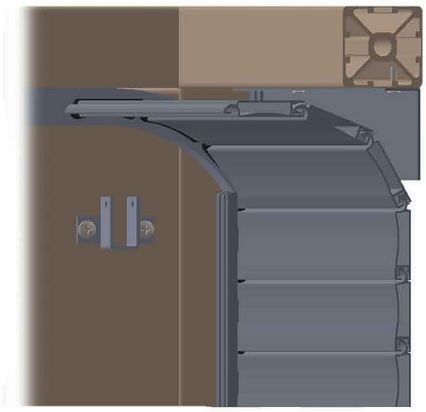

Right support

Roller and belts

12. Insert the roll in the holders.

A

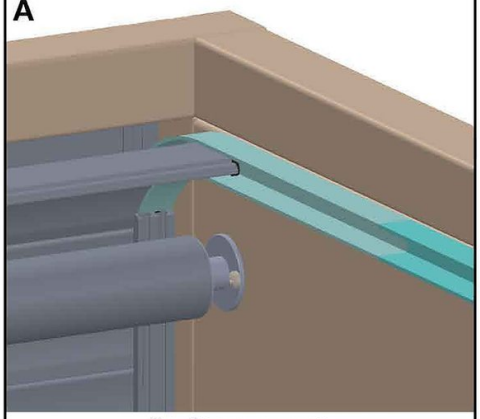

Left support

B

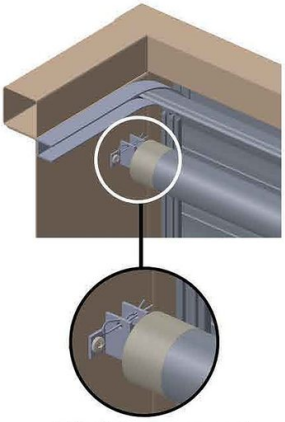

Right support

C

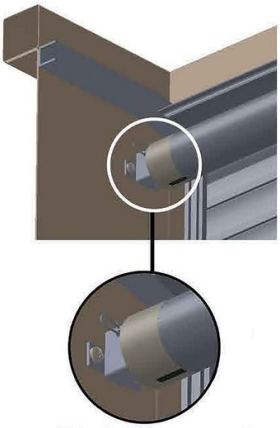

Right support

WARNING: Insert the betea pin in the right support (B);
The black band must be downwards (C).

13. Unwind the belts until they reach the last shutter profile at the bottom.

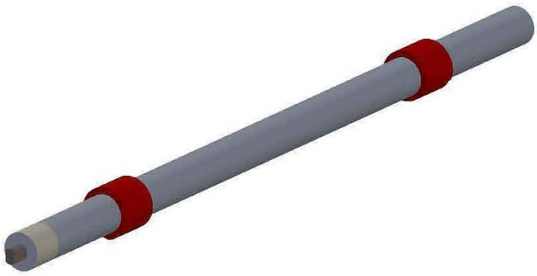

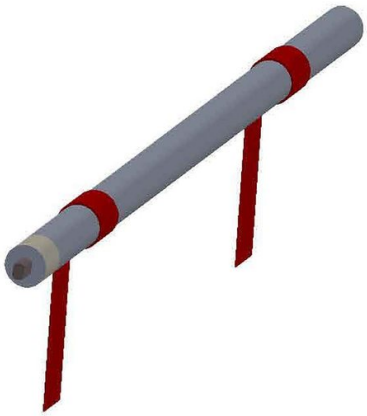

14. Fix the belts to the last shutter profile at the bottom, prepared for fixing, using the plates and the rivets provided.

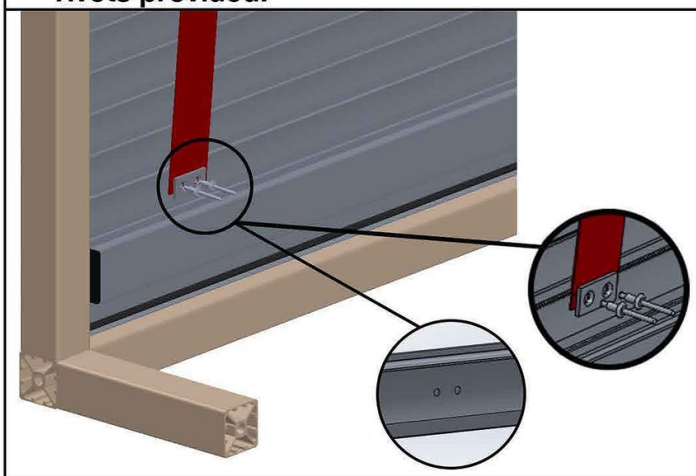



Roller engagement

15. Remove the paper from the roll, the black band must be facing downwards.
WARNING: The safety pin will come off and the roller will be in the charging position.

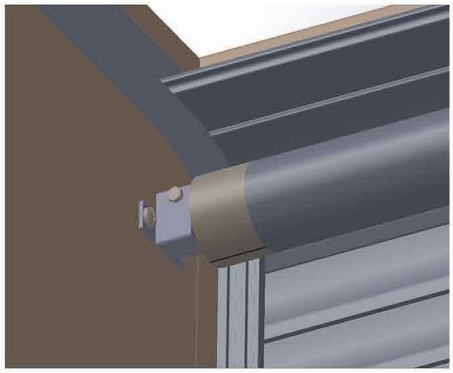

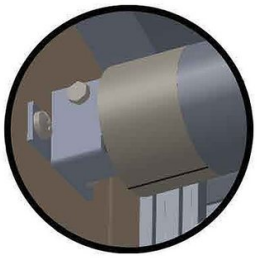

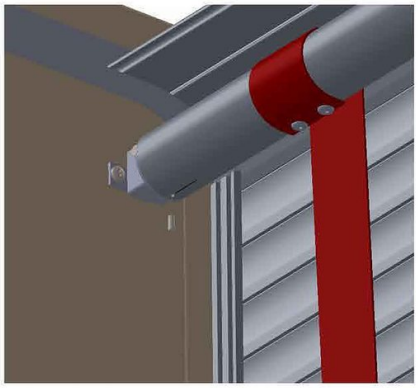

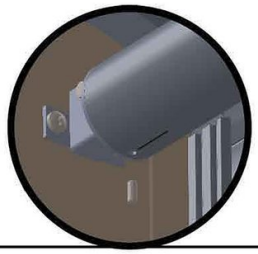

16. Hold the roller by making it a half turn towards the inside of the compartment.
The belts will wind up and the shutter will slide all the way under the roof.

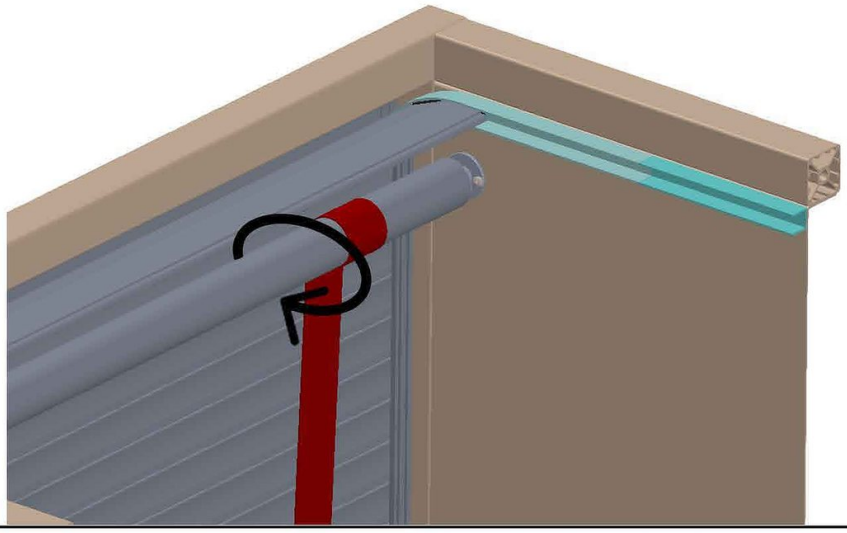

Closing system T1

FIXING CLOSING SYSTEM T1.
17.A - Fix the plate to the frame.

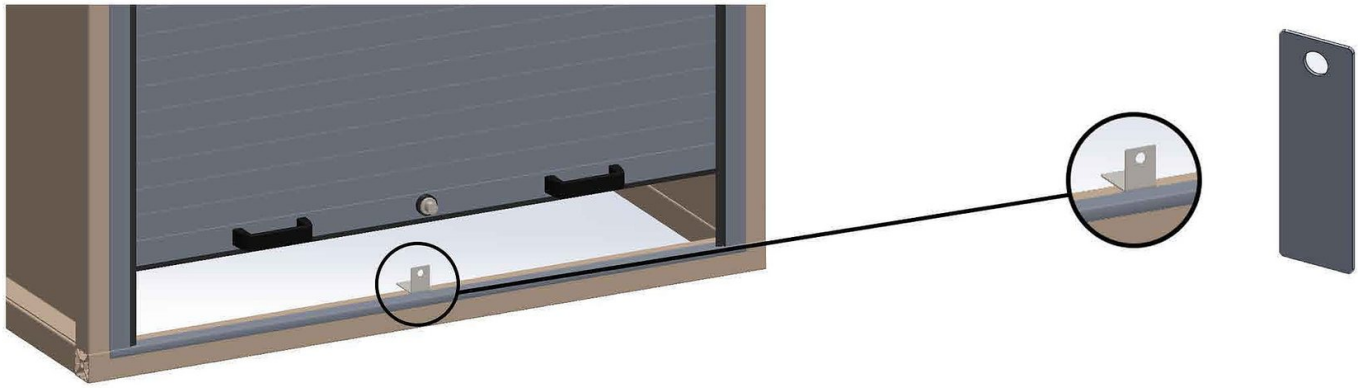

17.B - One curve and one xtension, fix the holdig spring.

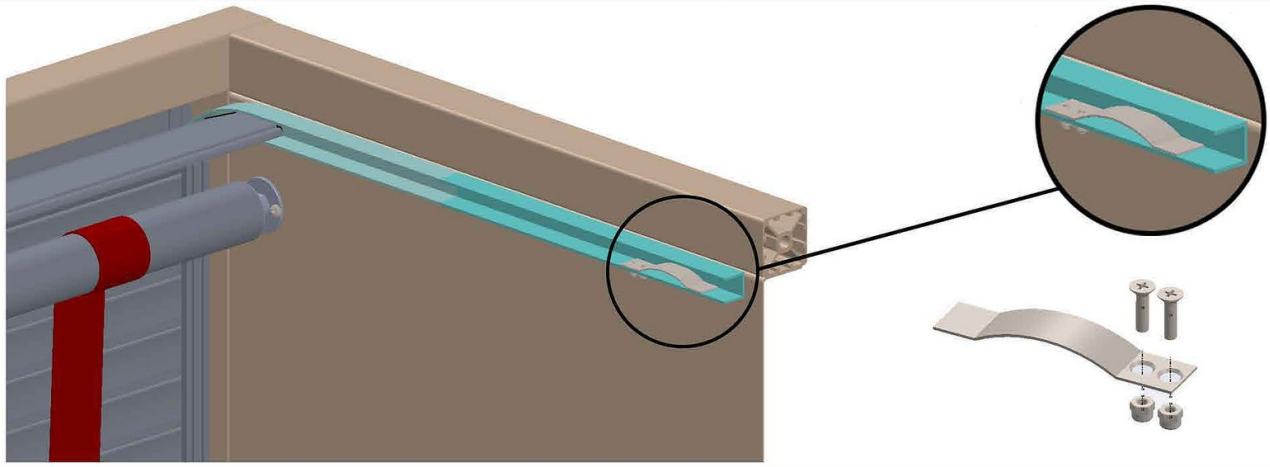

17.C - Two curves and back extensions, fix the pad.

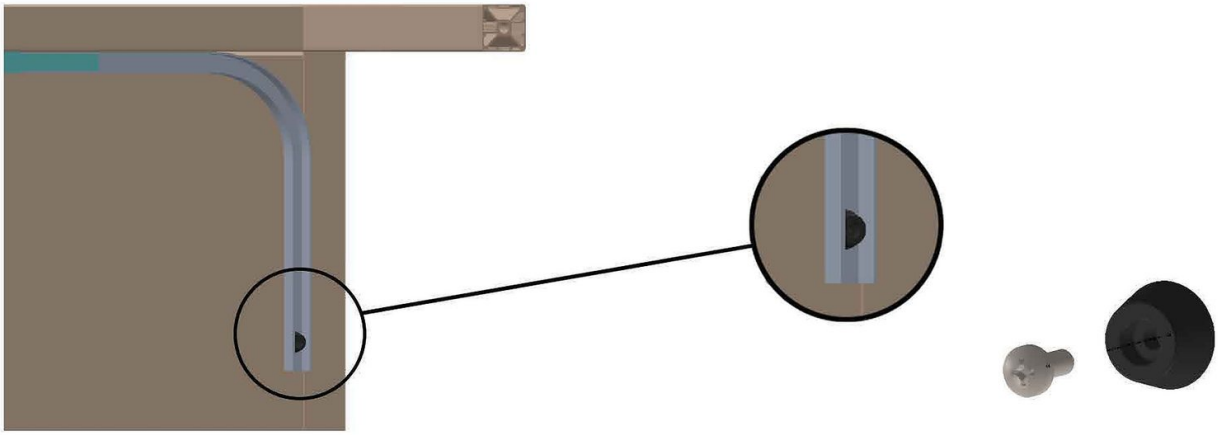

Closing system T2

FIXING CLOSING SYSTEM T2
18.A - Drill the guide and fix the lower block (aglas) at 60 mm from the ground.

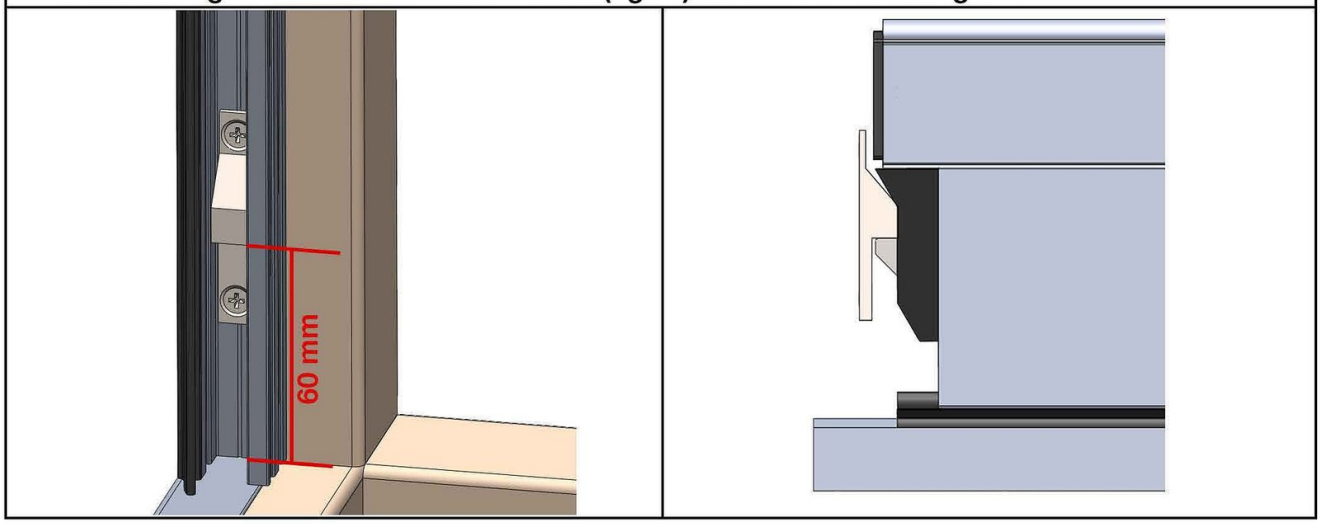

IN CASE OF ECO MODEL

18.B - With one curve and extension, fix the stop spring.

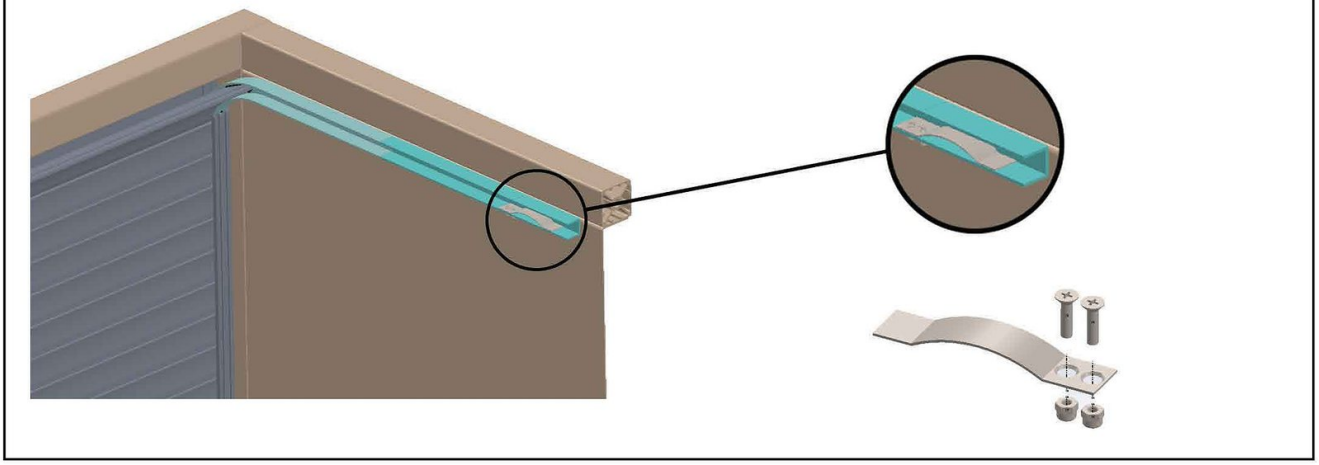

18.C - With second curve and back extension, fix the rubber.

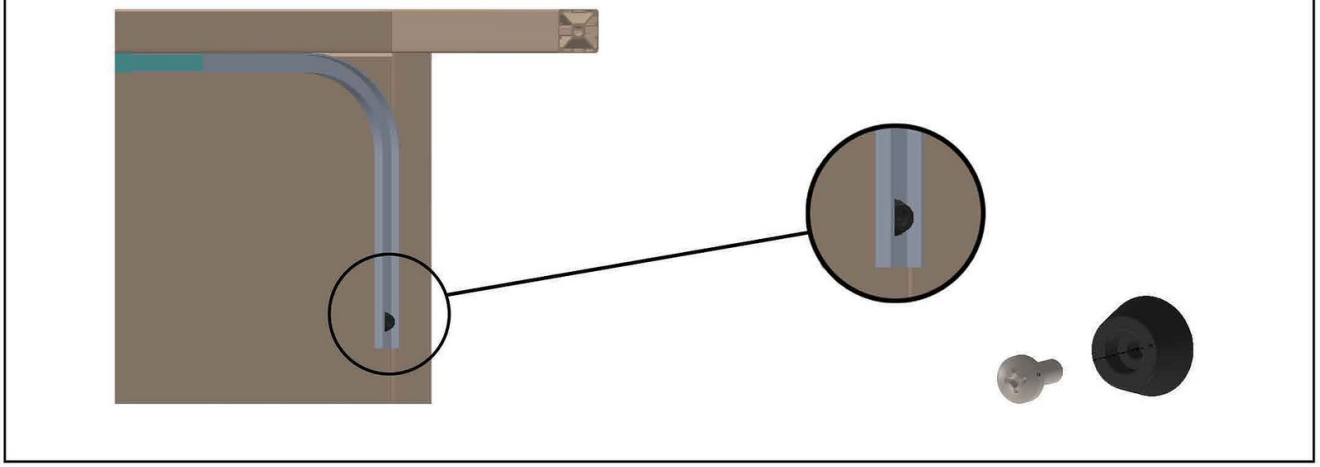

T2 upper block for ECO PLUS

IN CASO OF ECO PLUS MODEL

18.D - Fix the upper block.

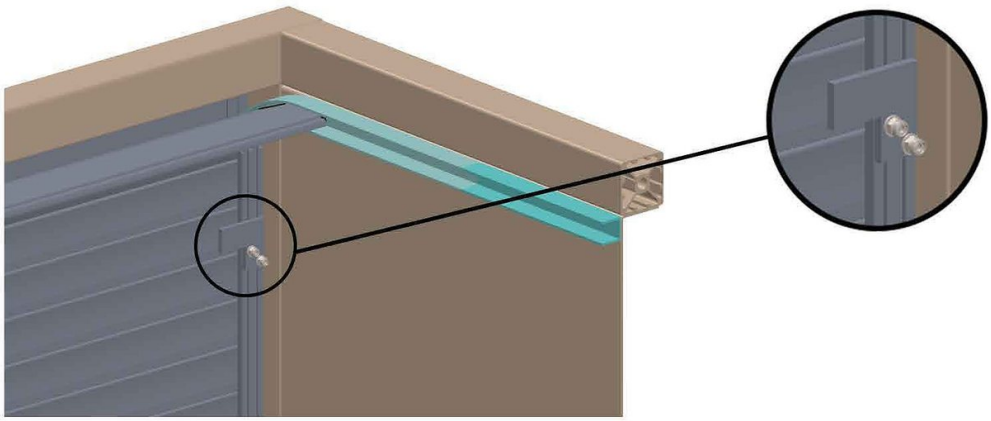

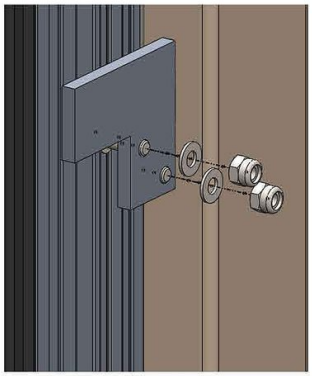

Closing systems T3 and T5

FIXING CLOSING SYSTEM T3 e T5.
19.A Insert the tube ø20 (Ws + 20 mm) in the blocks (A). After that, insert the plugs in the tube (B).

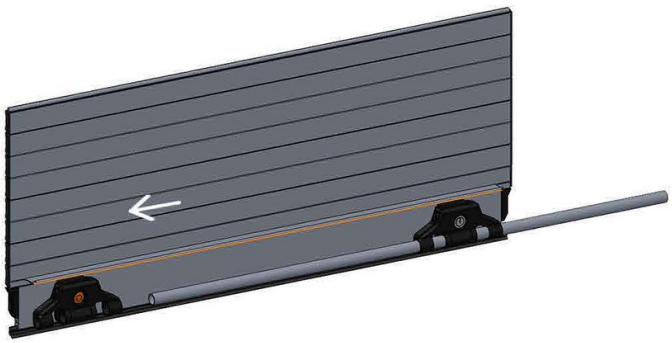

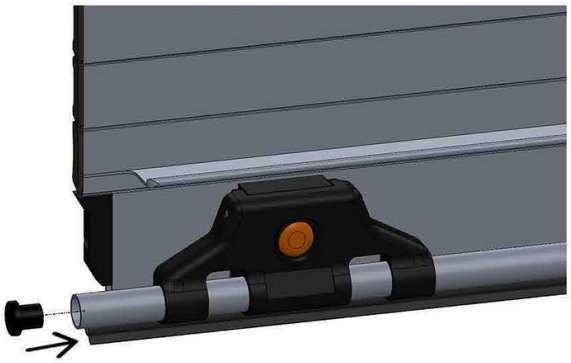

19.B - Fix the lower block (aglas)

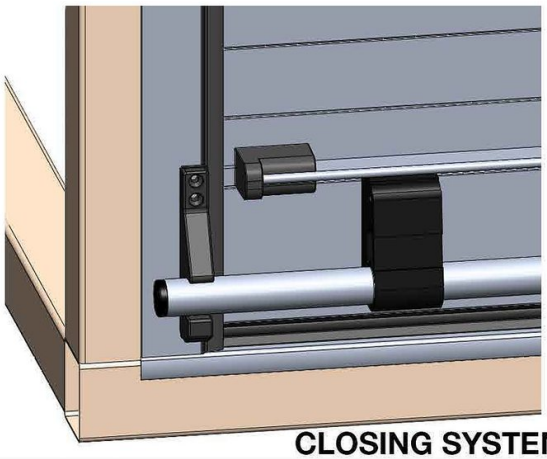

CLOSING SYSTEM T3

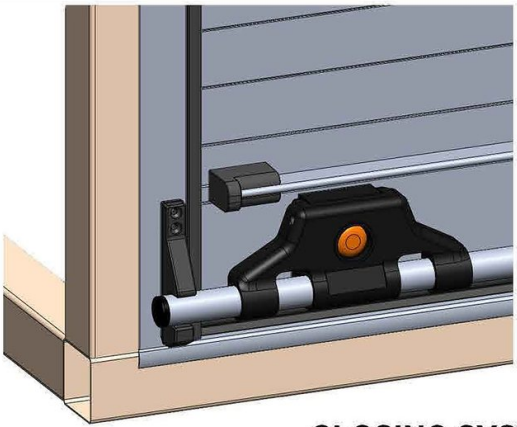

CLOSING SYSTEM T5

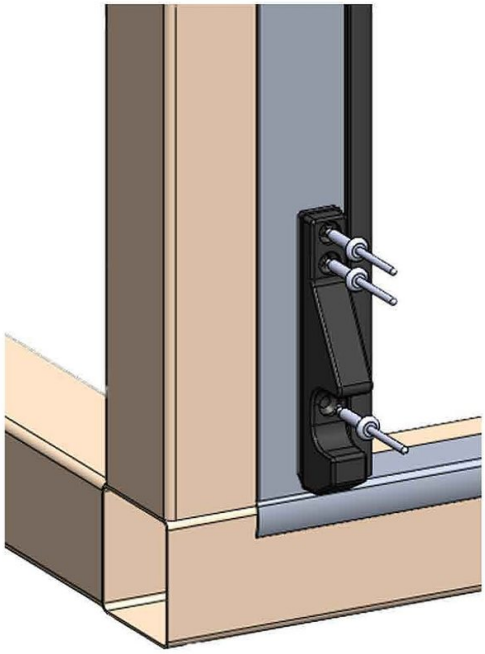

Upper locking blocks

ECO

19.C - Fix the same aglas, but upside down, in the higher part of the guide bringing the shutter to the desired height.

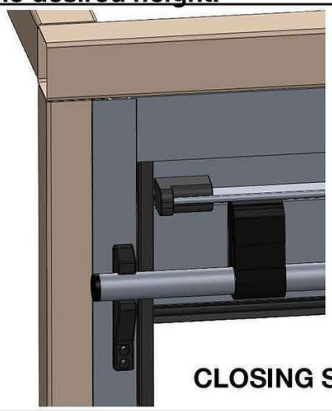

CLOSING SYSTEM T3

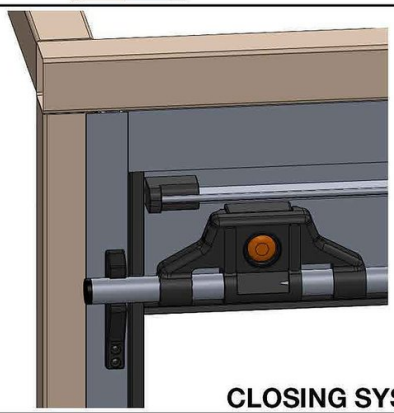

CLOSING SYSTEM T5

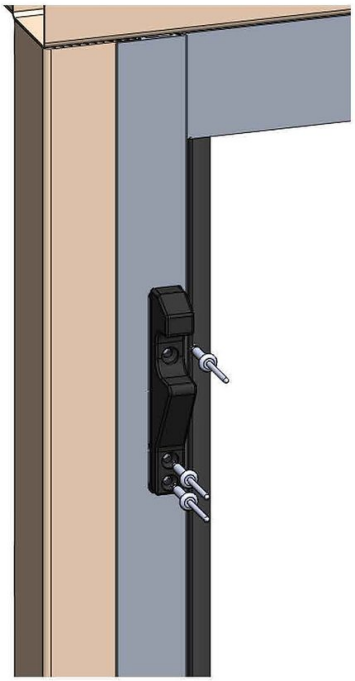

ECO PLUS

19.D - With Eco Plus model, fix the upper aglas in the higher part of the guide, bringing the shutter to the desired height.

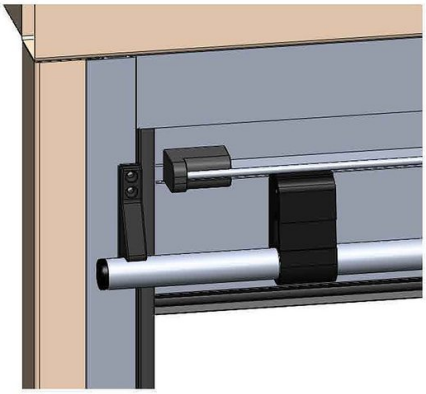

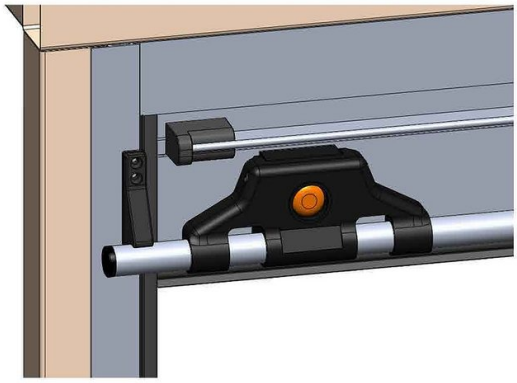

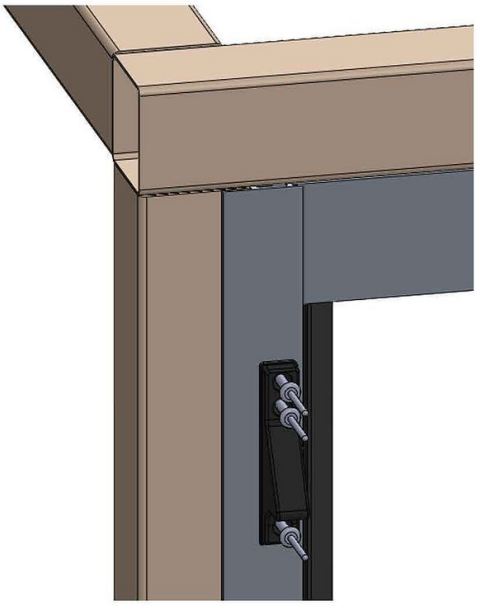

Gutter profile and pull belt

20. Drill and fix the gutter profile (optional). Insert the rubber if you mount the big gutter profile.

BIG GUTTER PROFILE

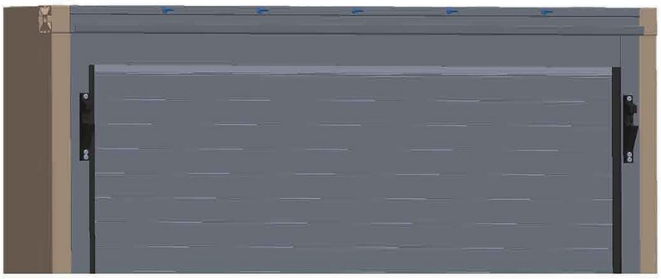

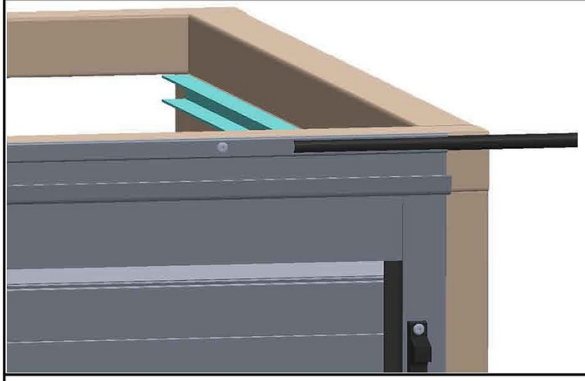

SMALL GUTTER PROFILE

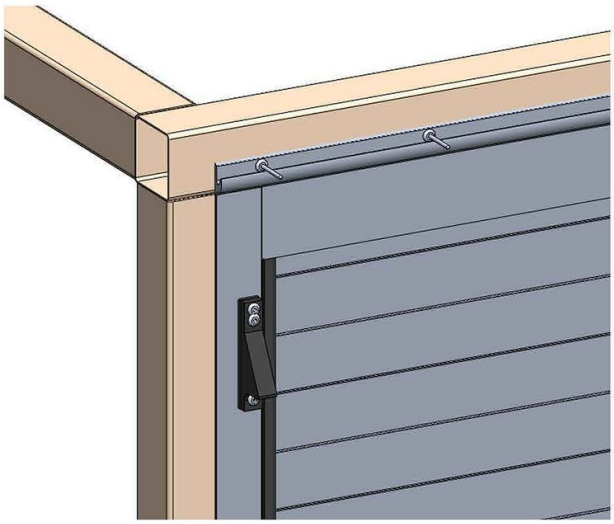

BIG GUTTER PROFILE



SMALL GUTTER PROFILE



ONLY FOR ECO PLUS MODEL

21. Drill and fix one end part of the pulling belt by the supplied screws. Hole ø4.
With the shutter open, fix the other end part of the beltto the side wall of the compartment.

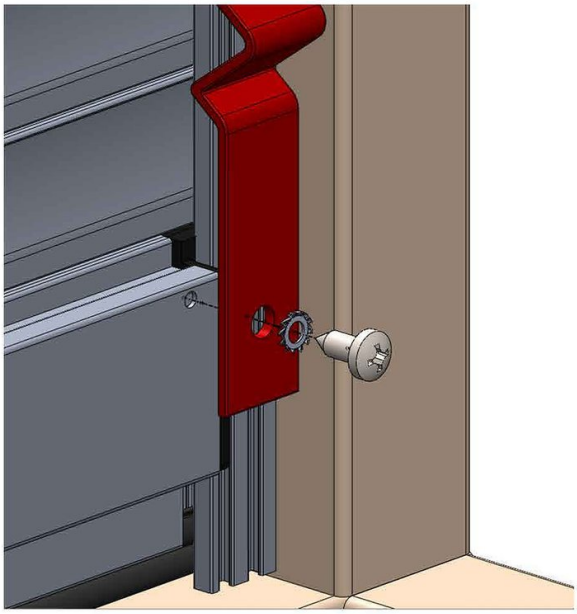

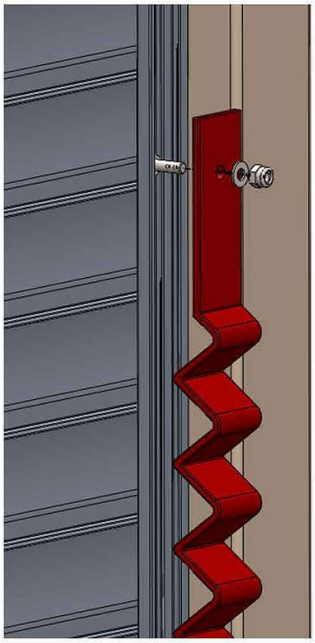

Completed installation

22. The shutter is ready to be used.

